www.oregonmetro.gov

Westside Trail Master Plan

PLAN REPORT NO. 3—DESIGN FRAMEWORK

February 2013

Metro | *Making a great place*

ABOUT METRO

Clean air and clean water do not stop at city limits or county lines. Neither does the need for jobs, a thriving economy, and sustainable transportation and living choices for people and businesses in the region. Voters have asked Metro to help with the challenges and opportunities that affect the 25 cities and three counties in the Portland metropolitan area.

A regional approach simply makes sense when it comes to providing services, operating venues and making decisions about how the region grows. Metro works with communities to support a resilient economy, keep nature close by and respond to a changing climate. Together we're making a great place, now and for generations to come.

Stay in touch with news, stories and things to do.

www.oregonmetro.gov/connect

Metro Council President

Tom Hughes

Metro Councilors

Shirley Craddick, District 1
Carlotta Collette, District 2
Craig Dirksen, District 3
Kathryn Harrington, District 4
Sam Chase, District 5
Bob Stacey, District 6

Auditor

Suzanne Flynn

TABLE OF CONTENTS

TRAIL DESIGN TYPOLOGY 1

Utility partner standards 1

Development and operating partner standards 2

Other jurisdictional partner standards 7

Accessibility 8

Midblock crossings 13

Design typology recommendations 14

Design themes 16

Structural features and amenities 17

WILDLIFE HABITAT TOOLBOX 23

Utility partner standards 24

Trail crossings 27

Invasive plant species 31

Habitat restoration and preservation principles 32

Prairie grasslands restoration toolbox 33

Forests and woodlands preservation toolbox 36

Wetlands, streams, and riparian preservation toolbox 37

Appendices 39

TRAIL DESIGN TYPOLOGY

Consistency in trail design and features provides trail users with certainty and a sense of place with respect to the facilities they use and experience, and provides trail developers and operators with a common template creating economies in both construction and maintenance. Lengthy multi-jurisdictional trails, such as the Westside Trail, however, face changing opportunities and constraints. Different jurisdictions may want their segments of the Westside Trail to be consistent with local standards and maintenance practices. Trail width, slope treatments, surface materials, and structures may need to accommodate neighboring development, vegetation, drainage, topography, and roadway patterns.

This chapter proposes a set of recommended but flexible standards and guidelines. The standards of partner jurisdictions and agencies that may have a part in developing the Westside Trail are summarized. Sections on relevant Americans with Disabilities Act (ADA) standards, other accessibility considerations, and midblock crossing standards follow, and a merged set of design typology guidelines are proposed. Two trail design themes are described, and examples of trail features and structures that should be considered in establishing unified design themes are included.

Utility partner standards

Bonneville Power Administration and Portland General Electric

BPA and PGE require unimpeded access to power utility infrastructure for maintenance and emergency purposes. This may create significant challenges in developing the Westside Trail in steeper areas such as Bull Mountain (Segments 2 and 3). Although ADA-accessible grades can be achieved for these segments by using extensive trail switchbacks that avoid the actual footprint of power poles and towers, it is highly likely that the necessary trail retaining walls, safety railings, and slope cuts would greatly restrict utility maintenance vehicle access.

BPA disclaims liability for damage to trail property and facilities or injury to trail users during maintenance, reconstruction, or future construction of BPA facilities within the power corridor. BPA also requires that paved asphalt trails within power right-of-way be constructed to withstand an American Association of State Highway Transportation Officials (AASHTO) classified HS20 vehicle. The HS20 loading standard designates a three-axle truck and trailer with the front axle carrying 8,000 pounds and the rear axles each carrying 32,000 pounds.[1]

PGE retains the right to enter the power right-of-way or easement "to erect, maintain, repair, rebuild, operate and patrol the power lines, telecommunication lines, structures and appurtenant signal or communications and all uses directly or indirectly necessary to perform its operations." PGE requires that paved asphalt trails be constructed to withstand up to a 60,000-pound vehicle weight. The maximum PGE maintenance vehicle length is 37 feet and the turning radius for such vehicles must also be accommodated. A similar turning radius requirement can be expected for BPA vehicles.

[1] View an illustration of an HS20 truck and trailer at http://precast.org/2010/07/hl93-truck-loads-vs-hs20-truck-loads/.

PGE also requires that "for safety reasons, no impediments may be added to the right-of-way that impede the ability to traverse the right-of-way with maintenance vehicles on a 24-hour-per-day 7-day-per-week basis." Like BPA, PGE also disclaims any liability with respect to trail user injury or trail or property damage that might occur during maintenance, reconstruction, or future construction of PGE facilities.

Development and operating partner standards

Oregon Department of Transportation

Oregon Bicycle and Pedestrian Design Guide

ODOT has adopted AASHTO guidelines for path design standards. The ODOT design guide[2] includes chapters for on-road bikeways, walkways, street crossings, and intersections as well as "shared use paths." Shared use paths are those used by pedestrians, joggers, skaters, and bicyclists. The guide notes that trail design must consider the varying needs of these different users. The guide also notes "there are circumstances where economics or physical constraints make it difficult to meet standards. A reasonable approach must be taken, so extraordinary sums are not spent on a short section of path; nor would the natural landscape be excessively disturbed."

The guide suggests that shared use paths have 3-foot-wide or greater (minimum 2-feet-wide) gravel shoulders on each side. Shoulders contribute to path stability and allow recovery by bicyclists who stray off the paved surface. Safety railings and fences along steep side slopes or waterways should be at least 2 feet from the path. The recommended minimum vertical clearance over the path is 10 feet, 8 inches. Table 1 summarizes key ODOT standards. Concrete surfaces are recommended for heavily used trails and to maximize the longevity of the surface.

Table 1: Trail width based on level of use

Two-way cyclists and pedestrians (unless otherwise noted)	**Trail width**
One-way cyclist	6'
Few users and/or space constraints	8'
Typical minimum in rural area	10'
Urban and suburban mixed use	12'
High mixed use, faster/commuting bicyclists	12'+
High mixed use of multiple modes	Add separate soft surface trail on one side
Very high use by both bicycles and pedestrians	16' (Two 5' bike lanes and one two-way walking area, striped)
Extremely high use by both bicycles and pedestrians	18'–20' Striped in proportion to expected users; Separate paths for each mode

Adapted from *ODOT Oregon Bicycle and Pedestrian Design Guide*

[2] http://www.oregon.gov/ODOT/HWY/BIKEPED/pages/planproc.aspx

Metro

Green Trails: Guidelines for Environmentally Friendly Trails

This guidebook provides "recommendations to complement existing standards and guidelines adopted by local cities, counties, park providers and watershed groups in the region." The guidebook focuses on "trails in environmentally sensitive areas and recommends strategies for avoiding or limiting the impacts on wildlife, water quality and water quantity." The chapter on types, dimensions and materials suggests that "trail surface materials reflect the kind and intensity of use expected and the environmental sensitivity of the site." The guidebook points out that safety and environmental impacts may be serious concerns on trails that are too narrow, particularly if crowding forces users off of the trail.

Table 2 illustrates how to select trail widths and surface materials based on level of use. [3]

Table 2: Trail width and surface material based on level of use

Level of use / Trail type	Very low use (less than 25)[1]	Low (25-100)[1]	Moderate (100-200)[1]	High (200-400)[1]	Very high (greater than 400)[1]
Multiple-use hard surface	8'	8'	8'	10' [2]	10' [2]
Crusher fines surface, bikes	4'–5'	6'	8'	8'–10'	7'–10'
Natural surface [3]	18"–2'	2'–3'	3'–5'	4'–6'	5'–7'

Adapted from *Green Trails: Guidelines for Environmentally Friendly Trails*, Table 8-2

1 Estimated total number of users on a typical busy day in the busiest season.

2 Note to Table 8-2 states that the Portland metropolitan area uses trail widths of "up to 12 feet or more, where practicable."

3 Note to Table 8-2 also states that natural surfaces may require high and expensive maintenance, and recommends a surface of crusher fines when trails are wider, when hillside cross slopes are more than 20 percent, or when soil is not well-drained.

The guidebook's Table 8-3 (not shown here) suggests that hard surface trails be used in urban linear corridors and also in riparian areas and floodplains if trail use is high. The guidebook recommends permeable surfaces in riparian areas or floodplains in order to minimize runoff into water resources areas. Additionally, it contrasts asphalt and concrete for trail surfacing and stability in natural resource protection areas (see Table 3 below).

[3] Table 8-2, *Green Trails: Guidelines for Environmentally Friendly Trails.*

Table 3: Asphalt and concrete trail suitability in natural resource protection areas

Asphalt	Concrete
• Not suitable for wet areas • Will deform to accommodate tree roots • Porous grades can be used to facilitate infiltration	• Holds up well in wet areas • Not as prone to buckling from tree roots as asphalt • Better accommodates imperfections in the subgrade

Source: *Green Trails: Guidelines for Environmentally Friendly Trails*

City of Portland

Trail Design Guidelines for Portland's Park System

Portland Parks and Recreation (PP&R) created a Trail Type Matrix[4] to determine design standards for any given trail. The guidelines provide "ranges of width, longitudinal slope and cross-slope" to "allow flexibility to respond to site conditions and expected intensity of use." Since the Westside Trail within the City (portion of Segment 5 and all of Segment 6) is in steep, forested terrain, the matrix's *hiking (high challenge)* trail type (major use by walkers, minor use by runners and dog walkers) guideline is probably most applicable. For the proposed Westside Trail soft-surface trail through the West Hills to be ADA accessible and suitable for a wide variety of users such as equestrians and mountain bikers, some trail sections may merit widening.

The guidelines include 17 types of trail details. Cribbed steps (Trail Detail 01), timber steps (Trail Detail 02), boardwalks (Trail Detail 03), wood bridge with railings (Trail Detail 05), alignment tread crests (Trail Detail 14), alignment tread dips (Trail Detail 15), and cribbed retaining wall (Trail Detail 17) may be applicable in other segments of the Westside Trail. Table 4 summarizes key city standards, and the foregoing trail details are included as Appendix A in Plan Report No. 3.

[4] *Trail Design Guidelines for Portland's Park System*, pp. 11-12.

Table 4: City of Portland trail types with surface, width, and slopes

Trail type	Surface	Width	Longitudinal slope	Cross slope	Notes
Hiking (high challenge)	Soil / stairs	18”–30”	0–15% (short segments steeper than 15%)	2% min, 4% max	
Hiking (accessible)	Soil / gravel / engineered wood fiber or wood chips	4’ (with passing areas)–10’	0–5% (8% for max 50’)	2%	Use gravel causeway for poorly drained sites
Mountain biking	Soil / gravel / wood chips	18”–4’	0–12%	2–5%	18” one-way single track; add width and banking (super elevation at turns; harden surface with compacted soil/gravel to prevent erosion)
Equestrian	Soil / gravel / wood chips	3’–6’ (pair of riders)	0-12% (prefer 5% max)	2%	Sometimes specialized shoulder on multiuse trail; wood chips difficult to maintain
Walking, (road)biking, and equestrian	Gravel / asphalt / concrete	8’–25’ (10’–12’ pref. maint. vehicles)	0–3% (5% max)	2%	12’ asphalt (8’ min–14’ max) for major park path or lengthy multiuse trail

Adapted from *Trail Design Guidelines for Portland’s Park System* Trail Type Matrix p. 11-12.

Tualatin Hills Park and Recreation District

Trails Plan for the Tualatin Hills Park & Recreation District

The THPRD trails plan[6] states “trail width will depend on intended users. For example, narrower widths should be used in environmentally constrained areas with only hiking uses intended. Wider widths are desirable for shared bicycle use. Areas with natural trails (i.e., natural parks and greenspaces) are usually not ADA accessible and, therefore, should have a complimentary [sic] accessible route that meets or exceeds ADA standards in addition to the natural trails.” THPRD standards are summarized in Table 5.

According to THPRD staff, when not using federal funding, THPRD will consider the feasibility of greater than 5 percent and 8 percent longitudinal slope options. THPRD is currently building

[6] http://cdn1.thprd.org/pdfs/document19.pdf

trails using funds from a local bond measure passed in 2008 and is allowing grades of up to 10 percent, if necessary, to deal with existing conditions such as topography.

Table 5: THPRD trail design types and standards

Trail type	Width	Shoulders	Surface	Users
Regional shared use	10'–12'	2' gravel	Paved or other smooth rolling	Bicyclists, pedestrians, wheelchairs, baby strollers, skaters
Community shared use	8'–10'	1'–2' gravel	Paved or other smooth rolling	Bicyclists, pedestrians, wheelchairs, baby strollers, skaters
Neighborhood – urban = shared-use path/sidewalk	5'–8'	1' gravel (opt.)	Paved or other smooth rolling	Bicyclists, pedestrians, wheelchairs, baby strollers, skaters
Neighborhood – natural = soft surface trail	3'–8'	none	Earth, gravel, wood chips or other soft-surface material	Bicyclists, pedestrians

Adapted from Table 1, *Trails Plan for the Tualatin Hills Park & Recreation District*

City of Tigard

Tigard Greenways: Trail System Master Plan

Tigard's trail master plan[7] identifies three types of trails: regional, community, and neighborhood. The Westside Trail meets the Tigard definition of a regional trail. All three trail types in the Tigard hierarchy are shown in Table 6. The off-street soft-surface trail proposed through Tigard's Hillshire Woods in the Westside Trail's Segment 3 would serve fewer users and would probably be built to neighborhood trail standards.

[7] http://www.tigard-or.gov/community/parks/trail_system_master_plan.asp

Table 6: Tigard trail type with width, surface and shoulder

Trail Type	Width	Surface	Shoulder	Connect	Use
Regional	10'–14'	Paved or smooth	2' gravel	Multiple jurisdictions, regionally important parks and destinations	Long transportation trips and recreational opportunities
Community	8'–10'	Paved or smooth	1'–2' gravel	Regional trails and areas of local interest (schools, transit hubs, parks, etc.)	Local use for shorter recreational trips, family outings and for commuting purposed
Neighborhood	3'–8'	Paved or soft surface	Optional	Bicycle- or pedestrian-oriented destination (bus stop, school, neighborhood park, local retail site	Short trips; help formalize "demand trails" to minimize negative impacts

Adapted from Table 5, *Tigard Greenways: Trail System Master Plan*

Other jurisdictional partner standards

Washington County

Community Development Code

The Accessway and Greenway Design[8] section of this Washington County code contains standards applicable to trail design.[9] The code allows for modifications to the following design standards if strict compliance (such as maximum longitudinal slope or minimum width) due to constrained site conditions is not practicable.

- Maximum slope of 5 percent wherever practical
- 10-foot-wide paved surface to safely accommodate both bicycles and pedestrians
- Surface of asphaltic concrete according to the Washington County Road Standards or other all-weather surfaces (including pervious paving materials) as approved by the county engineer
- 9-foot 6-inch vertical clearance to accommodate bicyclists
- Removable, lockable posts (bollards) that prevent use by unauthorized motor vehicles at all intersections with streets

[8] Section 408-9

[9] *Accessways* are defined as "any off-street way intended for the primary use of pedestrians and/or bicycles." *Greenways* are defined as "any off-street way intended for travel use by pedestrians and bicyclists, but also intended for recreational use."

Multnomah County and City of King City

These two jurisdictions do not have design standards for hiking or multiuse trails. Multnomah County would likely refer to ODOT bicycle and pedestrian standards, the guidelines of PP&R, or possibly THPRD. The City of King City would likely refer to Metro guidelines or the standards of an adjacent jurisdiction, such as Tigard, or use ODOT standards if the portion of the trail within the City (Segment 1) were developed with federal funds.

State of Oregon State Historic Preservation Office

SHPO manages and administers programs for the protection of the state's historic and cultural resources. Although not a direct partner in the Westside Trail Master Plan (WTMP), two issues related to SHPO historic designations were documented. SHPO reports that initiatives are underway to consider historic designation for BPA power line infrastructure in recognition of the historic importance of the Columbia River hydropower system to the development of Oregon and the Pacific Northwest. Segment 4.17 of the Westside Trail corridor runs through the Oak Hills neighborhood north of US 26. This neighborhood was built in the early 1960s, and the residential and community facility architecture remains substantially unchanged. An application nominating Oak Hills for listing in the National Register of Historic Places has been prepared by the Oak Hills Homeowners Association and is currently under consideration.

Discussions were held with SHPO with respect to the impact of the trail on securing and maintaining these two historic designations. SHPO indicated that there were no apparent conflicts.

Accessibility

Providing for the accessibility of a wide range of trail users with different abilities and challenges and meeting ADA standards should not be a problem in most segments of the Westside Trail. Paved accessible surfaces, cross slopes of 2 percent or less, and longitudinal slopes of 5 percent or less can be achieved with, at most, a limited number of switchbacks. The exceptions include some trail subsections in Segments 2 and 3 (Bull Mountain) and in Segments 4.21 to 5 (approaching and entering Portland's West Hills). These subsections will be difficult to design and engineer to meet a combination of ADA grade requirements, power utility maintenance access stipulations, and habitat restoration and preservation goals. In Segments 2 and 3, topography and utility access are the primary challenges. In Segments 4.21 to 5, topography and habitat preservation are the primary constraints.

Recommended Westside Trail alignments directly address accessibility challenges with respect to Bull Mountain and Portland's West Hills. In portions of these areas, ADA-compliant trails are simply not possible given the relatively narrow available trail corridor under transmission power lines and the extreme slopes and cross slopes that must be crossed. For Bull Mountain, accessibility challenges are addressed with short "bypasses" on adjacent existing streets. In the West Hills, a soft-surface pedestrian trail and a separate on-street bike route are proposed. In the West Hills an additional limitation is the probable impact on surrounding forest habitats from the switchbacks that would be required to meet 5 percent grades.

National guidelines

The US Department of Transportation (DOT) published *ADA Standards for Transportation Facilities* in 2006. These standards were based on the 2004 US Access Board *Accessibility Guidelines*. Together with the 2010 US Department of Justice *ADA Standards for Accessible Design*, these documents form the basis for compliance with the Americans with Disabilities Act (ADA) and the associated Architectural Barriers Act. ODOT suggests consulting AASHTO's *Designing Sidewalks and Trails for Access*[10] where site conditions preclude compliance with the recommendations for average and maximum grade.

> *AASHTO recommends a maximum grade of 5 percent for bicyclists, with steeper grades allowable for up to 500 feet, provided there is good horizontal alignment and sight distance; extra width is also recommended. On paths intended primarily for transportation, Americans with Disabilities (ADA) requirements should be met: the grade of separated pathways should not exceed 5 percent to accommodate wheelchair users. Based on AASHTO recommendations and ADA requirements, 5 percent should be considered the maximum grade allowable for shared-use paths. For trails with primarily a recreational purpose in areas with steep terrain, these grades may be exceeded. The recommended standard cross-slope grade is 2 percent which provides for adequate drainage and meets accessibility requirements.*

Trail projects under US Forest Service guidelines can be exempted from ADA requirements if "compliance would cause substantial harm to cultural, historic, religious, or significant natural features or characteristics; substantially alter the nature of the setting or purpose of the facility; require construction methods or materials that are prohibited by federal, state, or local regulations or statutes; or be infeasible due to terrain or the prevailing construction practices."[11] The *harm to natural features*, *alter the nature of the setting*, and *terrain* qualifications are particularly relevant to the steeper portions of the Westside Trail on Bull Mountain and in Portland's West Hills where trail grades of up to 10 percent may be necessary to avoid habitat degradation and impeded access to utility infrastructure.

Alternative accessibility approaches

A central consideration of trail design with respect to AASHTO guidelines is that federal funding comes with a requirement for ADA compliance. Variations to these standards can be approved without necessarily imperiling federal funding eligibility, but there are no absolute "greater than 5 percent" standards, as such. Some flexibility is possible if local jurisdictions have ADA compliance review processes. Variance processes must be followed to establish that a given design or alignment accommodates accessibility by other means and/or that there are extenuating circumstances, as for instance are described in City of Portland guidelines (see

[10] http://www.fhwa.dot.gov/environment/bicycle_pedestrian/publications/sidewalk2/index.cfm, publication FHWA-EP-01-027

[11] *Trail Design Guidelines for Portland's Park System*, p. 8

below). If local jurisdictions use their own funds for trail construction, accessibility and the degree of ADA compliance becomes a matter of local policy.

Another approach to ADA compliance involves using nearby developed vehicular streets with sidewalks and/or bike lanes. Such streets are in effect "grandfathered." This approach is used sparingly in the steeper portions of Westside Trail Segments 2 and 3 with existing bike lanes and sidewalks and more extensively in Segment 5 by using NW Springville Road and NW Skyline Boulevard. Plan Report No. 2 recommends that NW Springville Road and NW Skyline Boulevard be improved with 4-foot-wide shoulders on both sides to accommodate road bikes and pedestrians. Although parts of both roads have slopes greater that 5 percent, "the grade of pedestrian access routes within sidewalks is permitted to equal the general grade established for the adjacent street or highway."[12] In all cases, the on-street segment is paired with a soft-surface alternative accommodating all types of trail users with the exception of road bikes.

Local responses

The City of Portland's ADA compliance guidelines were reviewed and approved by the Portland Citizen's Disability Advisory Committee (PCDAC). These guidelines discuss accessibility and note that "public process and PCDAC review helps to determine what type and amount of use is likely and appropriate to each site."[13] PCDAC can approve trails that are not accessible or that are very challenging.

Portland's trail design guidelines include a table showing three different sets of accessibility criteria. One column in this table—Accessible Trail—provides criteria by which trail slopes, cross slopes and other features can vary from baseline ADA requirements and is adapted as Table 7 that follows. Slopes greater than 5 percent are allowable under certain circumstances, for instance 8.33 percent for a maximum run of 50 feet at which point slopes need to return to lesser grades and/or landings must be provided. This Portland standard is based on State of Minnesota guidelines originally derived from US Department of Agriculture Forest Service guidelines used in making determinations for allowed ADA modifications (See page 9 in Plan Report No. 3).

[12] Proposed Accessibility Guidelines for Pedestrian Facilities in the Public Right-of-Way, July 2011, Architectural and Transportation Barriers Compliance Board, http://www.access-board.gov/prowac/nprm.htm

[13] *Trail Design Guidelines for Portland's Park System*, p. 6

Table 7: Portland technical provisions for accessible trails

Surface	Firm and stable *(Exception*)*
Maximum running slope	1:20 [5%] (for any distance) 1:12 [8.33%] (for max. 50') 1:10 [10%] (for max. 30') 1:8 [12.5%] (for max. 10') *(Exception: 1:7 [14.3%] for 5' maximum for open drainage structures or when * applies)*
Maximum cross slope	1:20 [5%] *(Exception: 1:10 [10%] at the bottom of an open drain where clear tread width is a minimum of 42 inches.)*
Minimum clear tread width	36" *(Exception: 32" when * applies)*
Tread obstacles	2" high maximum *(Exception: 3" maximum where running and cross slopes are 1:20 [5%] or less.)(Exception*)*
Passing space	Every 1,000' where clear tread width is less than 60", a minimum 60" X 60" space, or a T-shaped intersection of two walks or corridors with arms and stem extending minimum of 48". *(Exception*)*
Resting intervals	60" minimum length, width at least as wide as the widest portion of the trail segment leading to the resting interval and a max. slope of 1:20 [5%] *(Exception*)*

*The provision may not apply if it cannot be provided because compliance would cause substantial harm to cultural, historic, religious, or significant natural features or characteristics; substantially alter the nature of the setting or purpose of the facility; require construction methods or materials that are prohibited by Federal, state, or local regulations or statutes; or be infeasible due to terrain or the prevailing construction practices.

Adapted from *Trail Design Guidelines for Portland's Park System*, based on a table in *Trail Planning, Design, and Development Guidelines: Shared Use Paved Trails, Natural Surface Trails, Winter-Use Trails, Bikeways* by Minnesota Department of Natural Resources Trails and Waterways, 2006.

THPRD published ADA trail development guidelines in the 2006 THPRD *Trails Plan*. The THPRD guidelines are based on the 1991 US Department of Justice *ADA Standards for Accessible Design.* These standards were revised in 2010. The THPRD guidelines also reference the US Access Board's *Accessibility Guidelines* last updated in 2004. The THPRD *Trails Plan* includes the following table:

Table 8: THPRD ADA trail development guidelines

Item	Recommended Treatment	Purpose
Trail surface	Hard surface such as asphalt, concrete, wood, compacted gravel	Provides a smooth surface that accommodates wheel chairs
Trail gradient	Maximum of 5% without landings Maximum of 8.33% with landings	Greater than 5% is too strenuous
Trail cross slope	2% maximum	Provides positive trail drainage, but avoids excessive gravitation to side of trail
Trail width	5' minimum	Accommodates a wide variety of users
Trail amenities, phones, drinking fountains, ped.- actuated buttons	Place no higher than 4' off ground	Provides access within reach of wheelchair users
Detectable pavement changes at curb ramp approaches	Place at top of ramp before entering roadways	Provides visual cues for visually impaired
Trailhead signage	Accessibility information such as trail gradient/profile, distances, tread conditions, location of drinking fountains and rest stops	Supports user convenience and safety
Parking	Provide at least one accessible parking area at each trailhead	Supports user convenience and safety
Rest areas	On trails specifically designated as accessible, provide rest areas/widened areas on the trail optimally at every 300'	Supports user convenience and safety

Adapted from Table 2, *Trails Plan for the Tualatin Hills Park & Recreation District*

The City of Tigard is another local example for managing trail accessibility. Tigard recommends signage explaining trail features that are not standard for accessible trail, and stipulates that if steeper segments are incorporated into a shared-use path, that less than 30 percent of the total trail length can exceed 8.33 percent slope. Table 9 summarizes recommended Tigard treatments with respect to differing slopes.

Table 9: City of Tigard trail slope standards

Longitudinal slope	Maximum length	Landings
5% max	N/A	N/A
5 – 8.5%	200’	Every 20’
8.5 – 10%	30’	Every 30’
10 – 12.5%	10’	10’

Source: *Tigard Greenways: Trail System Master Plan*

An additional local resource for dealing creatively with accessibility issues is Access Recreation’s *Guidelines for Providing Trail Information to People with Disabilities*. This Portland, Oregon-based nonprofit published the web-based document in January 2013.

Midblock crossings

The WTMP identifies eight arterial or collector midblock crossings along the trail corridor, as well as the midblock crossing of NW Skyline Boulevard and over 20 other local or neighborhood route streets. The specific crossings are cataloged in Plan Report No. 1, *Existing Conditions*. Recommended midblock crossing treatments are identified in Plan Report No. 2, *Trail Corridor Analysis.* The Westside Trail will cross up to 19 roads under Washington County jurisdiction, of which four are classified as arterials and two as collectors. The remaining two midblock crossings of major roadways are NW Springville Road, a rural collector under Multnomah County jurisdiction, and NW Skyline Boulevard, a special designation local street under City of Portland jurisdiction.

The usual standard for midblock crossings used for the WTMP is the Washington County *Pedestrian Mid-block Crossing Policy.*[14] For the NW Springville Road and NW Skyline Boulevard crossings, the Washington County standard was used as a starting point for planning purposes, and the recommended treatments were modified in consultation with the jurisdictional authority.

All Westside Trail arterial and collector midblock crossing solutions include a center lane refuge island, unless otherwise noted in Plan Report No. 2. Figure 1 is derived from the AASHTO and ODOT guidelines and illustrates a standard midblock crossing. The primary factor distinguishing collector and arterial midblock crossing solutions is whether a flashing beacon or pedestrian-activated signal is used. Midblock crossing treatments for NW Springville Road and

[14] http://www.co.washington.or.us/LUT/upload/MidbockCountyPolicy2010.pdf

NW Skyline Boulevard were adjusted for a treatment including flashing beacons but not refuge islands. Refuge islands would improve safety in crossing these two roads, but the current and future cross sections may not be sufficiently wide to accommodate islands. For local street or neighborhood route midblock crossings, the standard used is high visibility marked pavement crossings and warning signage.

Figure 1. Midblock crossing

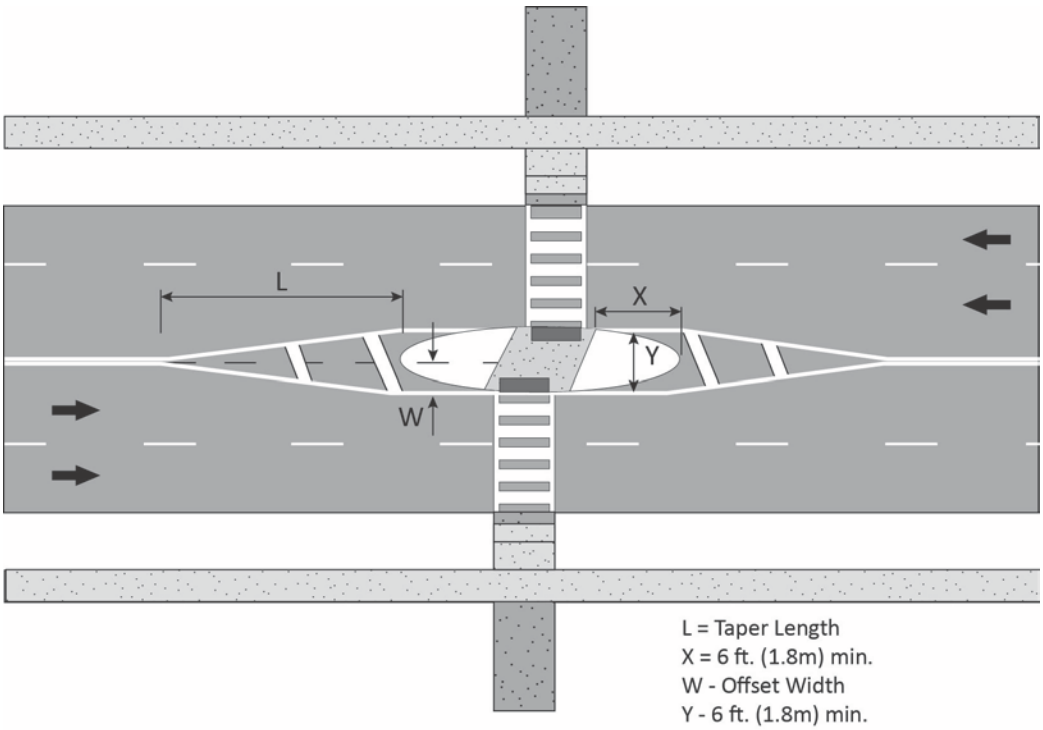

Source: AASHTO and ODOT guidelines Figure 5-22

Design typology recommendations

The following recommendations (Table 10) are based on a review and merging of the several jurisdictional guidelines and standards summarized above. The recommendations reflect local conditions and jurisdictional preferences combined with an estimated level of Westside Trail use extrapolated from traffic count records for nearby local trails and other regional trails. See Plan Reports No. 2 and No. 4 for details on each segment and subsection and the preferred trail alignment options.

Trail usage is likely to increase as additional segments or nearby bicycle and pedestrian facilities are completed. Many trails built at widths of 8 or 10 feet can become quite crowded as use increases. User conflicts and congestion may be particularly challenging as increasing numbers of higher speed commuting or “expert” cyclists interact with slower recreational cyclists and pedestrians. At the time of actual design and engineering of particular trail segments or subsections, current standards and practices and updated trail use information should be reviewed. Appropriate changes to the recommendations contained in Table 10 should be considered based on such reviews.

Table 10: Recommended Westside Trail segment width, surface and slopes

Trail section	Jurisdiction	Width	Surface	Longitudinal slope	Cross slope	Notes
1	King City	10'–12' (2' gravel shoulder both sides)	Asphalt or concrete	0- 5%	2%	Option of separate soft-surface equestrian trail
2A 2B	Washington County	10'–12'	Concrete	5–8%	1%	Use Colyer Way for road bicycles
2C 2D	Washington County	10'–12'	Concrete	0–8%	1%	Includes bridge across gully
3E	Tigard	4' (pedestrian only)	Soil with gravel as needed	0–8%	2%	Rolling grade to avoid erosion and minimize tree impacts
3A 3B 3D 3F 3G	Tigard	10'–12'	Asphalt	0–8%	2%	
4A 4D	THPRD	10'–12'	Asphalt	0–5%	2%	
4B 4C	THPRD	10'–12'	Concrete	0–5%	1%	Commuting cyclists may use bike lanes; all others use two-way path next to roadway
4E 4F 4H 4I	THPRD & Washington County	10'–12'	Asphalt	0–5%	2%	

4J	Washington & Multnomah Counties & THPRD	10'–12'	Asphalt	0–5%	2%	
4K	Multnomah County	10'–12'	Asphalt	0–5%	2%	
5A 5B	Washington & Multnomah Counties & THPRD	10'–12'	Asphalt	0–5%	2%	
5C	THPRD	10'–12'	Asphalt	0–8%	2%	May need some short segments at 10–12%
5D	THPRD & Multnomah County	10'–12'	Asphalt	0–8%	2%	Includes 18 –20% Bannister Creek Park Trail
5E	Multnomah County & City of Portland	4' shoulder (both sides)	Asphalt	Match existing road slope	Match existing road slope	On-street segment
5F	Multnomah County & City of Portland	4'	Soil with gravel as needed	0–8%	1–2%	Rolling grade to avoid erosion & minimize tree impacts

Design themes

The power line

Photo credit: Doug Vorwaller

Although power towers and lines are a challenge and constraint to trail development, this infrastructure is also a unifying thematic element. Oregon SHPO officials have indicated that BPA transmission infrastructure is being considered for some form of historic recognition based on the crucial role of the Columbia River hydropower system in the development of the Pacific Northwest and Oregon. As this process unfolds, trail designers and builders should evaluate ways to make this history part of the trail experience.

Referencing design features and structures in place or proposed for other intersecting regional trails—Tonquin, Tualatin River Greenway, Willamette River Greenway, and Rock Creek—and for significant local trail systems connecting to the Westside Trail will also support a unified trail theme.

Wildlife and open space

The Westside Trail is being planned as a corridor for people and wildlife. The restored habitat within the trail corridor will provide a unique north-south linear space through highly urbanized communities for a wide variety of wildlife to live in and move through in relative safety.

The trail corridor is an important regional open space and will be visited and used by more than just bicyclists and pedestrians. Regional trail corridors can and do include equestrian areas, sports fields, playgrounds, community gardens, and other recreation amenities. Design should reflect the physical amenities and features in the many major park, greenway and open spaces along the trail—the Tualatin River National Wildlife Refuge, King City Park, Tualatin Hills Nature Park, Bronson Creek Greenway, Kaiser Woods Park, Forest Park, and so forth.

Wildlife habitat and open space themes can be emphasized with trail signage, interpretive facilities and graphics, and enhancements to the design of prominent structures such as bridges and retaining walls.

Structural features and amenities

The Westside Trail will include a variety of special features, structures, and improvements to make the route accessible, safe, and pleasant to use. These features can work together to support an overall trail design framework that communicates a unified sense of place, appearance, and experience. The illustration at right is of a bridge over Elk Creek in Southwest Oregon. Pylons at each corner of the bridge approaches were designed to reflect wildlife and local enterprises in the neighboring community and surrounding area. This illustrates the simplicity of making strong thematic statements even with bridge structures that are relatively utilitarian.

Photo credit: Randy Reeve

As with the other standards described in Plan Report No. 3, many of the partner jurisdictions along the trail have well-established design standards and practices. Most other jurisdictions have prior transportation, trail and/or park developments that define local preferences. Three partner jurisdictions—Portland, Metro, and THPRD—have design standards or practices in place or in development. The region's parks and open space coalition—the Intertwine

Alliance—includes these three jurisdictions as members and has initiatives underway to develop unifying design themes and practices that could apply to regional trails.

The design of trail features and amenities from the Tualatin River to the North Bethany neighborhood should generally refer to THPRD standards and practices. Between the North Bethany neighborhood and Forest Park, those segments within THPRD jurisdiction should generally follow THPRD preferences. Segments within Multnomah County or City of Portland jurisdiction should generally refer to Portland standards and practices.

Modifications may be made to reflect local jurisdictional preferences and conditions, but should be approached carefully to assure that overall design themes and trail improvements retain uniformity. Metro and Intertwine guidelines and this Plan Report No. 3 can be used to support overall consistency.

Major bridges

The WTMP includes conceptual specifications for three major bridge crossings: the Tualatin River, US 26, and potentially a deep gully in Segment 2. The bridge illustrated opposite is an example of a simple but aesthetically pleasing span as might be used to cross the Segment 2 gully. Other bridge types are illustrated elsewhere in this Plan Report No. 3.

Photo credit: Gregg Everhart

Plan Report No. 2 identifies the key structural design and engineering features of the three major bridges being considered along the Westside Trail, but does not address or cost aesthetic and design enhancements. In designing and constructing these bridges, enhancements should be considered to reflect the power line and wildlife themes established along the trail, and to accommodate wildlife passage. Solutions are illustrated elsewhere in this Plan Report No. 3 that suggest the possibilities for thematic and wildlife-friendly bridge enhancements.

Minor bridges and wetland boardwalks

The WTMP identifies several minor streams and smaller wetland areas that will be crossed by low bridges or boardwalks. The WTMP scopes boardwalks and bridges as low wooden or composite structures with railings on both sides. Other materials such as concrete are possible where wider wetlands must be crossed and particularly where the boardwalk or bridge connects

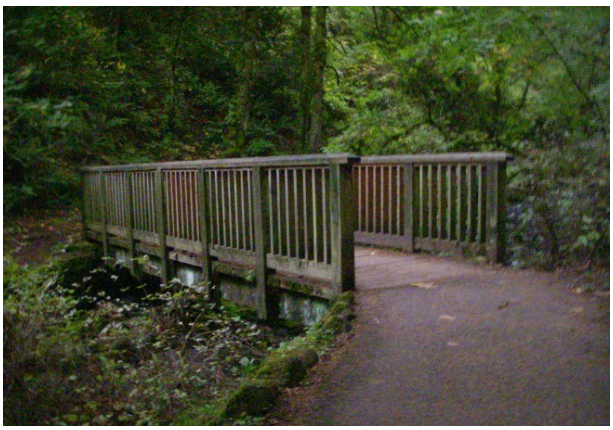

Photo credit: Gregg Everhart

multimodal trail sections. THPRD and City of Portland standards and examples are best referenced for these types of structures.

Photo credits:
Gregg Everhart

Steps

Steps may be required or desirable in some steeper trail segments to reduce grades and limit the number and impacts of switchbacks required, particularly when trail sections will primarily serve non-bicycle users. The WTMP scopes concrete stairs with safety railings on one side and a bike wheel gutter on the opposite side to accommodate walking bikes up and down the steps. Along soft-surface or steeper trail sections, wooden crib steps may be the better choice. The City of Portland has developed wooden step treatments for use within natural areas that could apply to all trail segments (see opposite and Appendix A).

Retaining walls

The WTMP assumes concrete retaining walls for trail switchbacks and ramps. Large expanses of such walls are an opportunity to create a more pleasing visual appearance with surface patterns including designs that reflect the wildlife and habitat supported in the trail corridor and the power line infrastructure overhead. Along soft-surface or steeper trail sections, especially where the trail is narrower, wood or rock retaining walls may be the better choice. The City of Portland has developed wood retaining wall standards for use within natural areas that could apply to all trail segments (See Appendix A).

Signage

Wayfinding signage on the Westside Trail will follow Intertwine Regional Trails Signage Guidelines.[15] Interpretive signage will follow Metro guidelines.

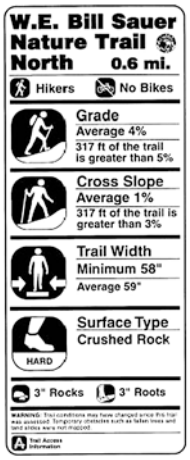

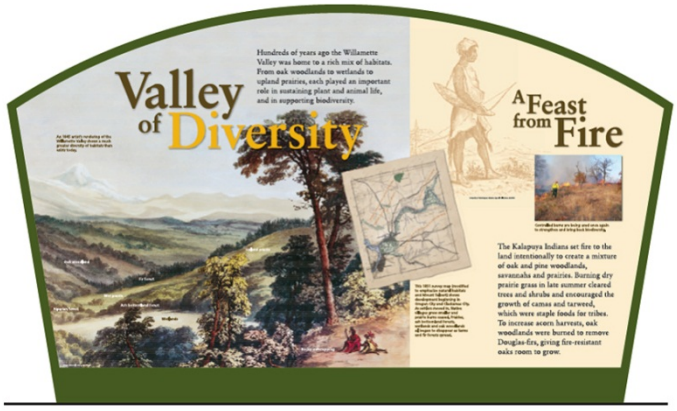

Photos courtesy of Metro

Lighting

The style of lighting used by THPRD for the extensive areas of the trail passing through power corridor grasslands should be adopted. THPRD also recently has been providing safety and security lighting at the points where trails cross public streets. This is typically being done at the request of the local road authority. In the wooded Portland West Hills, lighting solutions adapted by the City of Portland may be more applicable. In some cases lighting may be inappropriate in wooded and natural resource areas, given visual impacts and potential disturbance to wildlife and habitat values. Another consideration to improve the trail user experience is to utilize "dark sky" compatible lighting. This lighting is designed to illuminate trail surfaces and shoulders while minimizing upward light pollution and improving vistas of the night sky.

See the lighting section under the Wildlife Habitat Toolbox chapter of Plan Report No. 3 for more discussion on the impacts of lighting on wildlife.

[15] http://theintertwine.org/sites/default/files/file_attachments/Intertwine%20Regional%20Trail%20Signage%20Guidelines.pdf

Trail furniture

The style of trail furniture used by THPRD for the extensive areas of the trail passing through power corridor grasslands should be adopted for the balance of the open trail corridor. THPRD's trail plan includes furniture illustration and specifications. Example solutions of bench and trash receptacle solutions are shown below.

In the wooded Portland West Hills, trail furniture solutions developed by the City of Portland may be more applicable. For instance, this may mean using rocks and logs for sitting and resting purposes, instead of manufactured benches which are more vulnerable to vandalism in wooded areas.

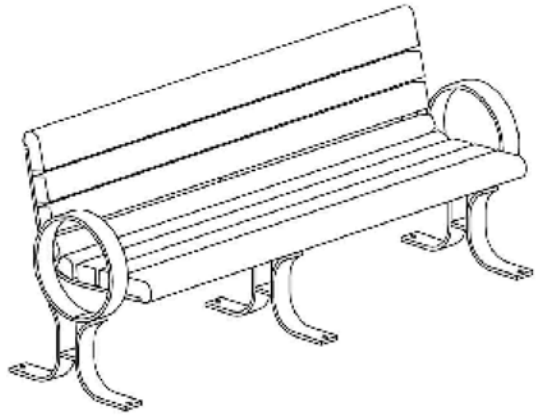

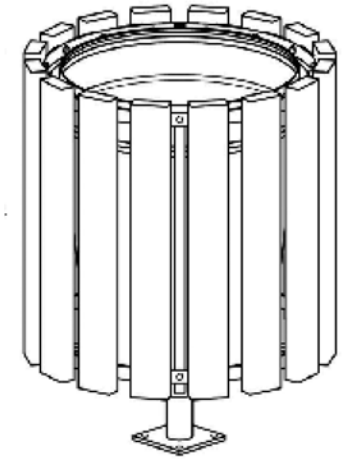

Source: *Trails Plan for the Tualatin Hills Park & Recreation District*

WILDLIFE HABITAT TOOLBOX

The Westside Trail will serve as a corridor supporting wildlife as well as bicyclists and pedestrians. Careful consideration of a variety of habitats in trail design and location can enliven the overall trail experience and help sustain urban wildlife populations. In general, the entire power line corridor is highly altered from natural conditions primarily as a result of power line maintenance practices, and also due to surrounding urbanization, road crossings, farming, and other activities. This notwithstanding, the power corridor is a unique opportunity to establish a continuous open space through urbanized areas that is supportive of wildlife.

Since the power corridor through which most of the Westside Trail passes is relatively narrow and surrounded by built land uses, no attempt to fully replicate historical plant communities is recommended. Nonetheless, the different combinations of soils, slope, exposure, and moisture along the trail corridor can support a broad and diverse range of plant species. Grasslands, shrub, riparian areas, woodlands and farmlands can be used by a wide variety of wildlife species. Wetlands, smaller streams, and natural features can be protected and even enhanced with thoughtful trail meanders and amenities and by the use of bridges and boardwalks. Additionally, the use of native species and natural systems can reduce water consumption and operational expenses (mowing, invasives control) in maintaining the trail corridor.

Illustration credit: Gregg Everhart

This chapter provides guidance for restoring or sustaining three primary habitat types that support wildlife and wildlife movements:

- Prairie grasslands
- Woodlands and forests
- Wetlands and riparian areas

This chapter first describes and illustrates the power utility maintenance requirements that will impact the range of habitat restoration or preservation that is possible The next sections outline approaches and practices for making a variety of trail crossing structures and features more wildlife-friendly. Standards for managing invasive species and general habitat restoration and preservation principles are followed by a prairie grasslands restoration toolbox. Separate sections on principles for preserving and mitigating forested lands and wetlands impacted by trail development conclude the chapter. Plant lists for all three habitats are included in Appendix B.

Utility partner standards

Power utility vegetation maintenance standards and access requirements will have to be understood and respected in any trail corridor habitat restoration or preservation action. Between the Tualatin River and North Bethany, the Westside Trail will be within the power transmission corridor controlled by BPA and PGE. Even after the trail turns east and approaches Portland's Forest Park, a substantial portion of the trail will be under or near BPA power lines.

Bonneville Power Administration

Revegetation Guidelines for BPA Rights-of-Way Study

In 1993, BPA established guidelines[16] for revegetation practices that help mitigate impacts to visually and environmentally sensitive areas within BPA rights-of-way. Vegetation plans for the trail will need to be approved by BPA. The BPA guidelines include useful principles and plant lists which should be referenced at the time of trail design and engineering and also as part of trail maintenance standards.

BPA's Division of Facilities Engineering Environmental Section is responsible for assessing the physical and visual impacts of transmission facilities. Heights of trees, shrubs, and groundcover in BPA rights-of way are limited in order to maintain safe and reliable transmission service. Reviews of Westside Trail plans with BPA staff in 2012 indicated that a 25-foot radius free from vegetation other than mowed grass should be maintained around wood power poles and a 50-foot radius from steel lattice towers. Utility standards specify grass but the primary parameter is "mowable." Mowable wildflowers and other low vegetation would probably satisfy utility requirements and greatly increase habitat values. No vegetation that can grow to over 10 feet tall and no tree species whatsoever can be planted in the corridor. Exceptions are possible in areas where power line infrastructure crosses over deep ravines and gullies (such as in Segment 2).

The BPA Transmission Facilities Vegetation Management Program is responsible for management of vegetation in rights-of-way. While the primary purpose of the program is to

[16] BPA (Bonneville Power Administration). 1994. Revegetation guidelines for BPA rights-of-way study. Final document. Prepared by David Evans and Associates, Inc.

ensure reliable operation of the federal transmission system, it also seeks to ensure public and worker safety, technical and economic efficiency, multiple use of rights-of-way, protection of environmental quality, and use of integrated pest management. Screening is sometimes allowed near private residences, recreational trail crossings, river and road crossings, or areas of high scenic value. The study states "it is desirable to retain vegetation wherever practical for its aesthetic value, wildlife habitat value, erosion control and other environmental benefits."

Techniques suggested in the BPA study to reduce the visual impact of vegetation clearing include:

- Retain a swath of vegetation, including grasses, brush, small trees, or other vegetation naturally occurring along watercourses and other sensitive areas.
- Feathering is a selective clearing technique that eliminates the "notched" appearance of a uniformly cleared right-of-way by leaving lower vegetation under the power lines and gradually increasing the height of retained vegetation nearer the edge of the right-of-way.
- Scalloping is a selective clearing technique that gives a curved, undulating appearance by marking the backlines based on tree heights in relation to the power line position at maximum sag and at maximum swing.

Portland General Electric

PGE does not have formal published standards for power corridor vegetation management. PGE's Forestry Department publishes a 6-page pamphlet titled *Trees and transmission lines: Planting and maintenance guidelines* aimed at private owners of land near to or under power lines. This pamphlet includes tables of acceptable native tree species and trees to avoid. These two tables are adapted and reproduced below.

PGE provided notes and drawings of lattice tower and H-frame power structures. These were combined with BPA information to create Figure 2 on page 27. Vegetation heights are limited as transmission power lines can sag between poles and lattice towers. For wooden H-frame poles, power lines can sag to 20 feet above the ground in worst-case operating conditions. Lattice tower power lines can sag to 22.5 feet above the ground. This input translates to the following principles for vegetation maintenance within PGE power corridors:

- Vegetation is restricted to a height of no greater than 15 feet at maturity within 30 feet of both sides from centerline of transmission towers and lines.
- Vegetation is restricted to a height of no greater than 35 feet at maturity from 30 feet to 62.5 feet of both sides from centerline of transmission towers and lines.

Danger trees are those that when falling could come within 30 feet of the centerline of transmission towers and lines. A sighting line that rises at a 42 degree angle, 30 feet away from the centerline is used to locate and check any tall trees that have obvious signs that indicate a potential failure risk.

Table 11: PGE's allowed trees

Common name	Botanical name	Height at maturity
Sitka willow	*Salix sitchensis*	15'
Coast willow	*Salix hookeriana*	15'
Red twig dogwood	*Cornus stolonifera*	6'
Red elderberry	*Sambucus racemosa*	15'
Vine maple	*Acer circinatum*	15'
Indian Plum	*Oemleria cerasiformis*	12'
Oceanspray	*Holodiscus discolor*	12'
Beaked hazelnut	*Corylus cornuta*	12'
Pacific ninebark	*Physocarpus apitatus*	12'
Mountain alder	*Alnus tenuifolia*	15'
Pacific wax myrtle	*Myrica californica*	15'
Mock orange	*Philadelphus lewisii*	8'
Western mountain ash	*Sorbus sitchensis*	15'
Douglas maple	*Acer glabrum v. douglasii*	12'

Table 12: PGE's trees to avoid

Alder	**Hawthorn**	**Pines**
Ash	**Fir**	Austrian Black
Mountain	Douglas	Japanese Black
Oregon	Grand	Ponderosa
Beech	White	Scotch
Birch	**Hemlock**	Shore
Catalpa	Mountain	Sugar
Cedar	Western	White
Deodora	**Locust**	**Redwoods/Sequoia**
Incense	**Maple**	**Spruce**
Port Orford	Big Leaf	**Sweetgum**
Western Red	Red	**Sycamore**
Cherry	Norway varieties	**Walnut**
Most native cherry species grow too tall	Silver	**Willow**
Chestnut	Sugar	(most types)
Cottonwood/Poplar	**Oak**	
Black Cottonwood	Oregon White	
Lombardy Poplar	Pin	
Tulip Tree (Yellow Poplar)	Red	

Figure 2. Vegetation limitations in BPA and PGE power corridor

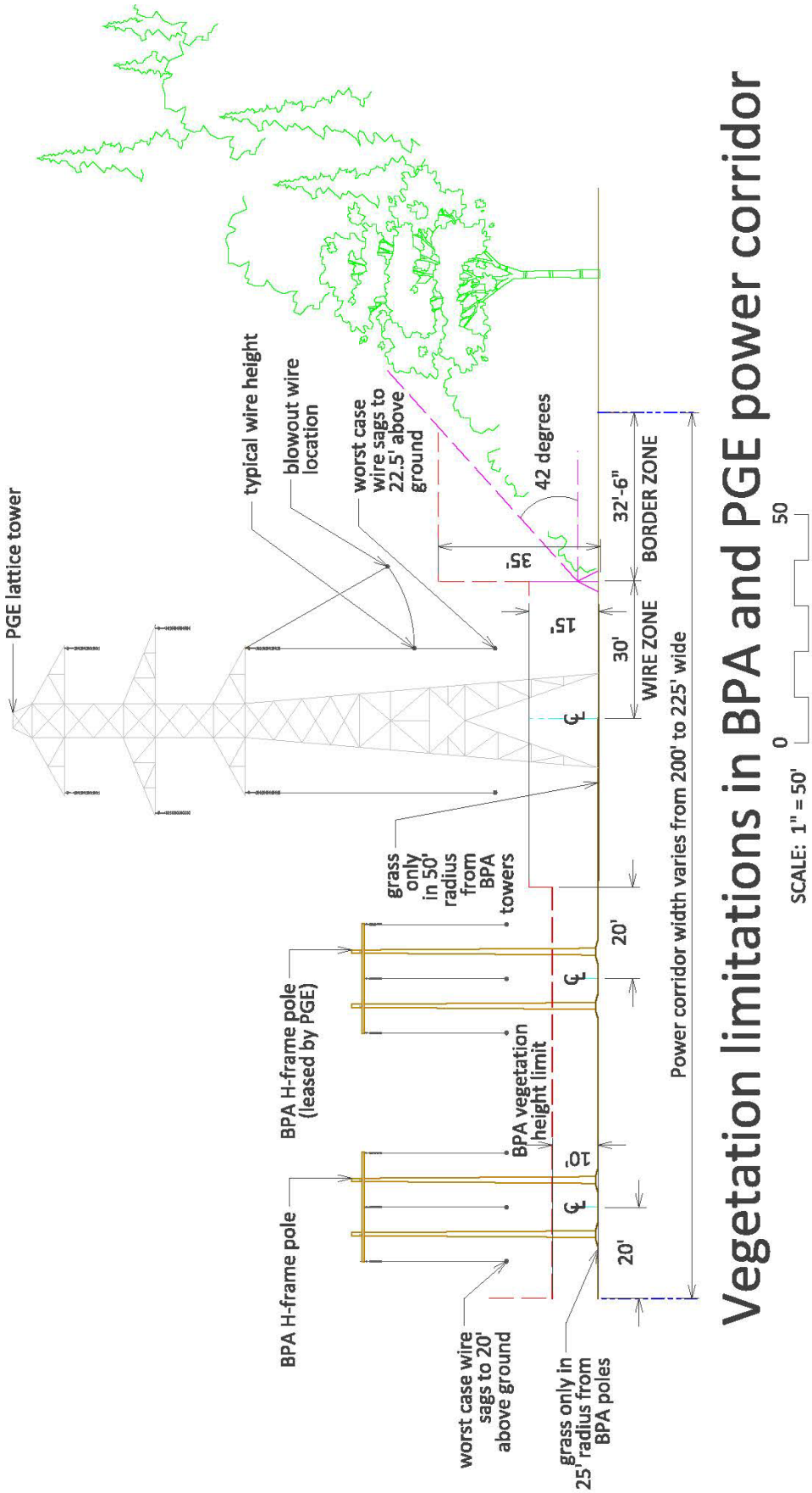

Graphic credit: Gregg Everhart

Trail crossings

The function of the trail corridor as a wildlife corridor is highly constrained by the numerous roads that are crossed, as well as by US 26 and the TriMet MAX line. Since the Westside Trail is primarily within a power transmission corridor, utility standards, as well as user visibility and safety considerations will require minimizing tree growth and managing encroaching vegetation around power infrastructure and at roadways. This notwithstanding, opportunities exist to improve habitat quality and connectivity and provide for safer wildlife movement. Many species that move within the corridor do not need the entire area to satisfy their needs. Smaller-scale connectivity even within a subsection of a trail segment can be achieved with appropriate habitat for species such as native turtles and salamanders.

Practices for midblock road crossings, crossing lighting, and bridges and boardwalks are discussed below.

Road crossings

Except for US 26, all Westside Trail road crossings will be at-grade. At-grade crossings are typically the least desirable crossing type for wildlife because few effective enhancements can be implemented. Metro's *Wildlife Crossings: Providing safe passage for urban wildlife*[17] states "vegetation along roadways and in medians can have both positive and negative effects." The handbook cites, for instance, a separate study in which birds were 85 percent more likely to be killed on roads with vegetated medians. In addition, a practice that is beneficial to one species may have no impact on another or even be harmful. Nonetheless, when crossings are made more wildlife-friendly, overall habitat connectivity can be enhanced. A careful balance must be struck between differing wildlife needs and crossing safety for trail users and users of the intersecting roadway.

- Where power transmission infrastructure restrictions and trail user sight lines allow, existing habitat should be left intact or new habitat provided as close to the crossing as possible to provide for wildlife cover.
- Fencing can direct wildlife toward the safer areas to cross both at-grade and under roads and over bridges and boardwalks.

Undercrossings designed for wildlife passage using wide culverts are also a possibility. Such undercrossings are not included in WTMP midblock crossing concepts or cost estimates but could be considered on a case-by-case basis. Undercrossings of roads in highly urbanized areas such as NW Walker Road are probably not practical, and, in any event, wildlife populations are relatively diminished. Undercrossings in very steep areas such as Bull Mountain may also present special engineering and stormwater management issues. At midblock crossings of roads through other developing and unincorporated areas, wildlife undercrossings may be more effective and economic and should be considered when such roads are upgraded. Examples include West Union Road and NW Springville Road.

[17] http://www.oregonmetro.gov/index.cfm/go/by.web/id=38104

Lighting at road crossings

Lighting at road crossing may be used to increase trail user and on-road vehicle safety. Many wildlife species, however, will avoid lighted areas or be more vulnerable to vehicle strikes by being temporarily blinded by lighting. Locating wildlife vegetation cover as far from crossing lighting as possible may provide better conditions for wildlife. Unfortunately this also means that wildlife will be less likely to use the area of the designated crossing where slowing vehicle traffic may reduce the odds of wildlife strikes.

Conversely, lighting at crossings may actually be beneficial for some species. Metro's handbook notes that "artificial lighting can provide more feeding time for birds by enabling nocturnal feeding" and "there are beneficial effects for some bat species feeding on insects attracted to street lamps..."[18]

Major bridge and boardwalk crossings

Two to three major bridge structures are planned along the Westside Trail. The WTMP does not identify any major undercrossings for either trail users or wildlife movement. All the bridges planned for the Westside Trail are described in the WTMP as conventional structures, as are the numerous minor bridges and boardwalks (see the Plan Report No. 2 and the Trail Design Typology chapter of this Plan Report No. 3 for more details). The Tualatin River and US 26 bridge crossings involve estimated spans of 330 feet and 230 feet, respectively, plus approach structures. Some form of bridge crossing is also probable across a steep-sided gully on Bull Mountain in Segment 2. Depending on this segment's final trail alignment, this bridge could be as long as 200 feet or as short as 30 feet.

Photo credit: City of Tualatin

The proposed US 26 and Tualatin River bridges could feature added design and habitat features to greatly improve wildlife passage. The Ki-a-Kuts Bridge illustrated above connects the cities of Tigard and Tualatin across the Tualatin River and is an example of an attractive and highly effective crossing that primarily accommodates human traffic. The bridge example on page 30 illustrates how an otherwise conventional highway crossing bridge can also accommodate habitat for wildlife in a simple and straightforward manner.

[18] *Wildlife Crossings: Providing safe passage for urban wildlife,* p. 22

Principles that could be applied to wildlife friendlier *major* bridges are:

Photo credit: Metro

- Incorporate contiguous habitat on bridge approaches and the bridge span itself. Plant native grasses and scattered shrubs, and do not mow the grass so it can provide cover.
- Lay small logs, rock piles, brush piles, or pipes along the length of the bridge to provide cover for small animals. Do not build a curb between the bridge's bicycle/pedestrian trail and wildlife habitat.
- There is a relationship between crossing length and willingness to cross—wildlife is more willing to cross short overpasses than long ones. Similarly, animals are more willing to use wide crossings than narrow ones. Make the crossing as wide and short as possible.
- Include natural structure and/or weave native materials into safety and security fencing and barriers along the bridge structure, particularly for birds and arboreal (tree-dwelling) mammals. Ropes or other similar structures extended from fencing or barriers to nearby trees and other natural features can also improve wildlife passage.

Other bridge and boardwalk crossings

Relatively short and low elevation bridges or boardwalks are planned to cross small streams or wetlands in several trail segments. These streams and wetlands are wildlife movement corridors that provide safe connections for wildlife between habitat patches. There are wildlife-friendly features that could enhance lower and shorter trail bridges and boardwalks. Some of the ideas below may better and more practically apply to different spans and construction materials and techniques, and the type of area being crossed—wetland, seasonal stream, etc.

- Within the limitations imposed by power corridor maintenance practices, trail user safety, and the need for adequate sight lines, preserve existing cover habitat or create additional new habitat as close to each end of the crossing as possible.
- Cover habitat could include unmowed native grasses, scattered shrubs, or small logs, pipes, and rock and brush piles. Use salvage materials such as logs, root wads, brush piles, and rocks to provide cover for small animals under bridges.
- Add natural structure to bridge or boardwalk safety fencing by weaving in native materials used by birds and arboreal mammals, and provide connections to adjacent off-bridge habitat in the form of ropes or other structures.

- Span the entire high-water floodway of the stream or wetland being crossed to allow wildlife passage under the bridge or boardwalk and to maintain the highest stream function.
- Maintain a 2-foot minimum width abovewater pathway for wildlife under bridges and a minimum clearance between the pathway and bridge underside of at least 2 feet.
- Retain as much openness and natural light under the bridge as possible, including grates or slots in the bridge deck to allow light to pass through.
- Create habitat and nesting structure under bridges for species such as bats and swallows.
- Retain or enhance native soils and natural flat benches under bridges, and retain or install structures such as boulders, to allow for wildlife passage during high water.
- If light, water, and soils allow, install shrubs and other native vegetation under bridge.

Invasive plant species

Invasive plants are a problem throughout the trail corridor, particularly in grassland areas which have been highly disturbed by prior development, utility maintenance practices, and human activity. Invasive plants can out-compete native species thus limiting or shrinking habitats supporting a wide range of wildlife populations. Invasive control eradication can be time consuming and expensive, introduce pollutants adversely impacting native plants and wildlife, and may in the end not be altogether effective or permanent.

Invasive Himalayan blackberry

Photo credit: Jim Rapp

- Efforts at invasive removal and eradication should always be paired with replanting and restoring with native species.
- Remove invasive or undesirable plant species using hand weeding or spot sprays to minimize impacts on wildlife and desirable plant species.
- Conduct removal of expanses of invasive or undesirable plant species in phases to provide for continued wildlife cover and structure until restored areas become established.
- Nonnative or invasive plants provide habitat for some wildlife species. Nonnative and invasive vegetation removal should be timed or phased to coincide with habitat restoration so there is no temporary net loss for wildlife.

Habitat restoration and preservation principles

The Westside Trail corridor is a highly altered landscape. Nonetheless, it is a unique open space and wildlife habitat ranging from 100 feet to 225 feet wide and extending north-south across the entire area of urbanized eastern Washington County and then further eastward into Multnomah County and the City of Portland. Improved habitat will enhance the trail user experience by providing a pleasant visual appearance and opportunities to view wildlife. There are existing habitat values to preserve in some segments, and the potential for restoration is substantial. The Westside Trail should be aligned within this corridor to minimize impacts to existing habitat, and trail management should include control of nonnative invasive species and establishment of native plant communities.

Restoration options will, however, be constrained by requirements to keep vegetation clear of power lines and structures and to provide for trail user and neighborhood safety and security. BPA and PGE vegetation management practices focus on preserving maintenance access and minimizing interference with power infrastructure. These practices limit the range of species present, and in some cases encourage nonnative invasive species. Since tall plant species are restricted or not permitted by power utility maintenance standards, new or enhanced habitat will never be "natural," as tall conifers or Oregon white oak would normally be dominant in much of the corridor, along with prairie grasslands.

Prairie grassland habitat is the most altered ecology within the trail corridor. Few, if any, regulations or mitigation requirements are applied to grasslands. Accordingly, RESTORATION will be the primary action in enhancing grassland habitat for wildlife. Forested areas and wetlands within the power corridor may require some restoration, but for the most part PRESERVATION is the key approach, combined, in places, with mitigation for the impacts of new trail construction. WTMP Plan Report No. 4, *Implementation Strategy* includes a table that identifies specific trail ecologies by segment and section and whether restoration or preservations actions should be primarily applied.

Ten overarching habitat restoration and preservation principles should be followed during trail design, engineering, and construction:

1. Utilize natural resources specialists or biologists in the trail design and engineering process, and conduct site visits to identify important habitat features and potential impacts to habitat connectivity.
2. Trail alignments and design should take into account the size (patch size) of existing valuable habitat to avoid adverse impact of fragmenting into narrow or small habitat patches.
3. Trails and trail amenities should be located in already disturbed or highly altered areas to the greatest extent possible.
4. Habitat restoration plans should be developed for all poorer quality habitat areas crossed by the trail.

5. Work closely with the power utilities to understand and comply with vegetation type, location and height limitations in order to establish higher quality habitat.
6. Trail alignments should act as a catalyst for habitat restoration and as opportunities for widening existing buffers—riparian, wetland, and other habitats.
7. Trail alignments should improve access to both restored habitat areas and areas with existing high-quality habitat, provided this habitat can be protected from inappropriate uses.
8. Consider wildlife species' ability to move through or across certain trail features. Certain types of trail surfaces, sun exposure, drying out from lower moisture, lack of cover for hiding from predators, and trail retaining walls are barriers to some species.
9. Provide interpretive signage along the trail and at crossings informing trail users about the values of wildlife and the restored habitat along the trail corridor, including encouraging trail users to keep pets on leash and providing "go slow—wildlife on trail" signage.
10. In woodlands and forested areas, trail alignments should maintain canopy connectivity and cover for arboreal species, for shade, and to retain moisture level at the forest floor.

Prairie grasslands restoration toolbox

Photo credit: Jim Rapp

Prairie grasslands were once the dominant habitat type in the Tualatin River Basin through which most of the Westside Trail passes. Less than 10 percent of these original grasslands remain. The Westside Trail could provide fifteen or more linear miles of an almost continuous grassland corridor ranging from 100 feet to 225 feet wide. This translates to significant acreage that can support wildlife populations and movements among major natural areas such as the Tualatin River National Wildlife Refuge, Tualatin Hills Nature Park, and other local nature parks, and between intervening east-west riparian corridors such as Bronson and Rock Creeks.

Open areas within the power corridor can support a wide range of wildlife. Birds, small mammals, and pollinators such as butterflies and bees will take advantage of the restored habitat. Landscaping and habitat restoration activities in prairie grassland habitats can incorporate swaths of wildflowers and shrub patches to provide food and cover for wildlife. The

Chicago Wilderness Magazine includes an excellent article entitled *Power & Plants*[19] that can be referenced for additional ideas.

The following habitat restoration guidelines and practices can be used by a variety of trail stakeholders and users ranging from a design/engineering team developing trail construction specifications to local community groups looking to improve their own particular patch of trail habitat. This toolbox is tempered by the requirement to protect and maintain access to the power line infrastructure that most of the trail will parallel. A central issue—perhaps *the* central issue—for preserving and restoring grassland habitat along the trail is the balancing of power utility maintenance standards with the goals of establishing and sustaining functional grassland habitat for diverse forms of wildlife. Figure 3 (page 35) combines habitat patch concepts with power utility limitations.

Prairie grassland restoration general guidelines

General guidelines for enhancing wildlife habitat in the prairie grassland sections of the trail corridor include:

- When suitable prairie grassland habitat is already present, it should be preserved or replaced if impacted by the trail alignment.
- Use native plant species in habitat patches, trail-side landscaping, and in screening buffers at corridor edges that are appropriate to soil, exposure, and moisture conditions.
- Vary habitat patch size with an emphasis on larger patches. Grassland habitat can be continuous along the trail, or habitat patches can be spaced and placed alongside other landscaping. Large patches are particularly desirable, and a few larger (half-acre or more) patches of suitable habitat should be incorporated into each trail segment.
- An edging of mixed plantings could be placed around individual patches for a more natural appearance and to visually link the patch with other patches in the trail segment.
- Utilize nearby open spaces to increase patch size and improve function for wildlife. Include nearby parks, natural areas, and residential or commercial native landscaping in the overall restoration plan or activity. Locating new or enhanced habitat patches near to neighboring native plant landscapes will create bigger overall patches and additional foraging areas.
- Consider landscape maintenance needs in determining trail alignments and habitat restoration plans. Where mowing is used around power infrastructure or to control invasive plants, create higher value habitat patches that maintenance crews can avoid.
- If wildflowers and grasses need periodic mowing to eliminate woody species, rotate mowed patches so wildlife can survive in some locations while others regrow.

[19] http://www.chicagowilderness.org/CW_Archives/issues/summer2005/comed.html

Figure 3. Habitat patches, screening and mowing in BPA and PGE corridor

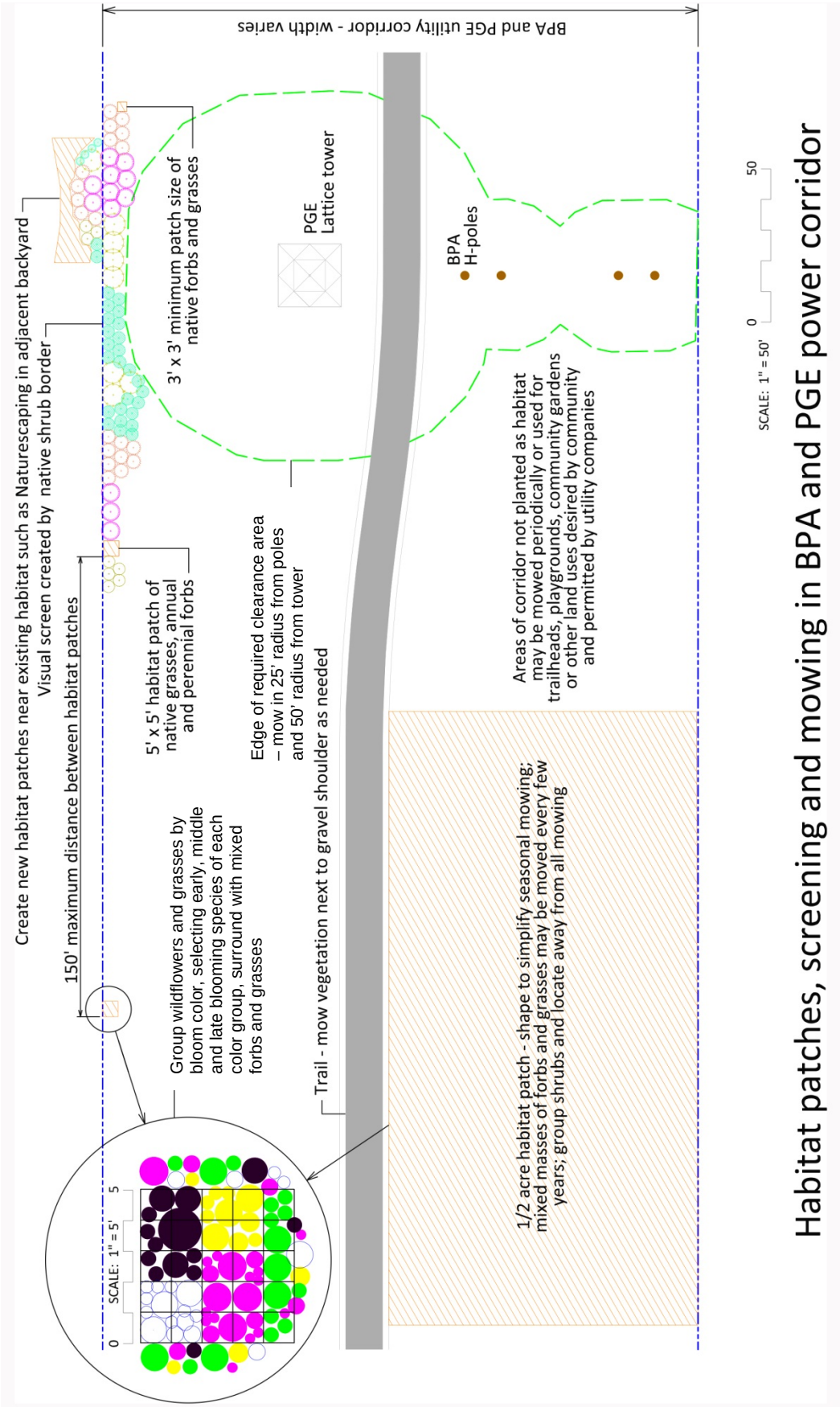

Graphic credit: Gregg Everhart

Prairie grassland habitat restoration practices and techniques

- The least-mobile wildlife (such as bees and butterflies) are best accommodated by suitable habitat patches no more than 50 yards apart.
- A habitat patch that provides effective pollinator foraging habitat should include several flower colors to attract a variety of species.
- For pollinators, install native plants in clumps of a minimum size of 3 feet by 3 feet; greater than 25 square feet is better. Having many plants of a single species in a clump increases foraging efficiency.
- Within each color block, several species with different bloom times will provide pollen and nectar throughout the season.
- Retain or create areas of downed wood, rock piles or other similar features near prairie grassland patches to provide nesting habitat for invertebrates, foraging habitat for birds and small mammals, and cover for small mammals and reptiles.
- Provide perches, nest boxes, and nesting structure for birds.
- Evergreen shrubs should be incorporated into habitat patches to provide shelter in winter months.
- Retain or create new unobstructed habitat on each side of the corridor where slopes require the use of switchbacks to meet acceptable trail grades. This provides an alternative route for small animals that cannot navigate walls or paved surfaces.

Forests and woodlands preservation toolbox

Forests and woodlands are home to many kinds of wildlife, especially where surface water is available. Along the Westside Trail corridor, substantial stands of woodlands and forests are found in the northeastern-most trail segments approaching Forest Park where the new trail will no longer be under power lines. There are woodlands on Bull Mountain and near the Nike Campus in Beaverton. General guidelines for preserving and enhancing wildlife habitat in forest and woodland habitats along the trail corridor include:

- Align the trail along forest edges rather than through forests wherever possible to reduce habitat fragmentation.
- Plant the nonforested side of the trail to expand forest habitat.

Photo credit: Gregg Everhart

- If the trail must be aligned through a forested area, retain canopy connectivity to maintain forest climate (shade and moisture) and travel routes for tree-dwelling wildlife.
- Design and engineer trail alignments and infrastructure and apply trail construction and maintenance methods that retain and preserve trees wherever possible.
- Consider using existing trails and pathways through forested areas, except where existing alignments create adverse impacts or widening and expansion of the existing pathway may create additional impacts.
- Trees felled during trail construction should be left in place for habitat enhancement purposes.
- Retain or create forest habitat on each side of the trail where slopes require the use of switchbacks to meet acceptable trail grades.
- Use native plants when restoring habitat along trails in forested areas, including native evergreens to provide winter cover for wildlife.
- Retain or create forest floor shrub habitat.

Wetlands, streams, and riparian preservation toolbox

More than 90 percent of the Portland metropolitan region's wildlife species use water-associated habitats at some point in their lives, whether for feeding, traveling, reproducing or other purposes. Animals such as dragonflies and pond-breeding amphibians start their lives in wetlands and use uplands in their adult phases. Both adequate water and connections to adjacent uplands are important to species lifecycles. General guidelines for preserving and enhancing wildlife habitat in wetland, stream, and riparian areas along the trail corridor include:

- Avoid wetland crossings whenever possible.
- Align the trail so there is a vegetated buffer between the trail and wetland. Buffers provide habitat for wildlife species and help reduce the potential for wetland and stream pollution generated by trail usage.
- If avoiding a wetland crossing is not possible, reduce impacts by using bridges and boardwalks.

Photo credit: Jim Rapp

- If wetland views are desired, use viewing platforms or areas with appropriate barriers and signage to discourage off-trail wandering.
- As part of trail construction, enhance or restore degraded or impacted wetlands by removing invasive nonnative plants and replanting with appropriate native plants.
- Where forested areas or woodlands are adjacent to wetlands crossed by the trail, design and construct the trail to maintain functioning wetland and forest connectivity for wildlife species that use both habitats.
- Minimize stream crossings to protect riparian areas.
- Trails along streams should be restricted to one side of the stream outside of existing riparian areas, and the upland side of the trail should be planted to expand the riparian area.
- Provide occasional near-stream viewing areas so trail users desiring water views or access do not create informal trails.
- If a trail must cross a wetland or pass between a wetland and adjacent uplands, align the trail to minimize the crossing and maintain wetland connectivity.

APPENDIX A

City of Portland Trail Details

Figure A-1 Cribbed Steps (Portland Trail Detail 01, pg. 41)

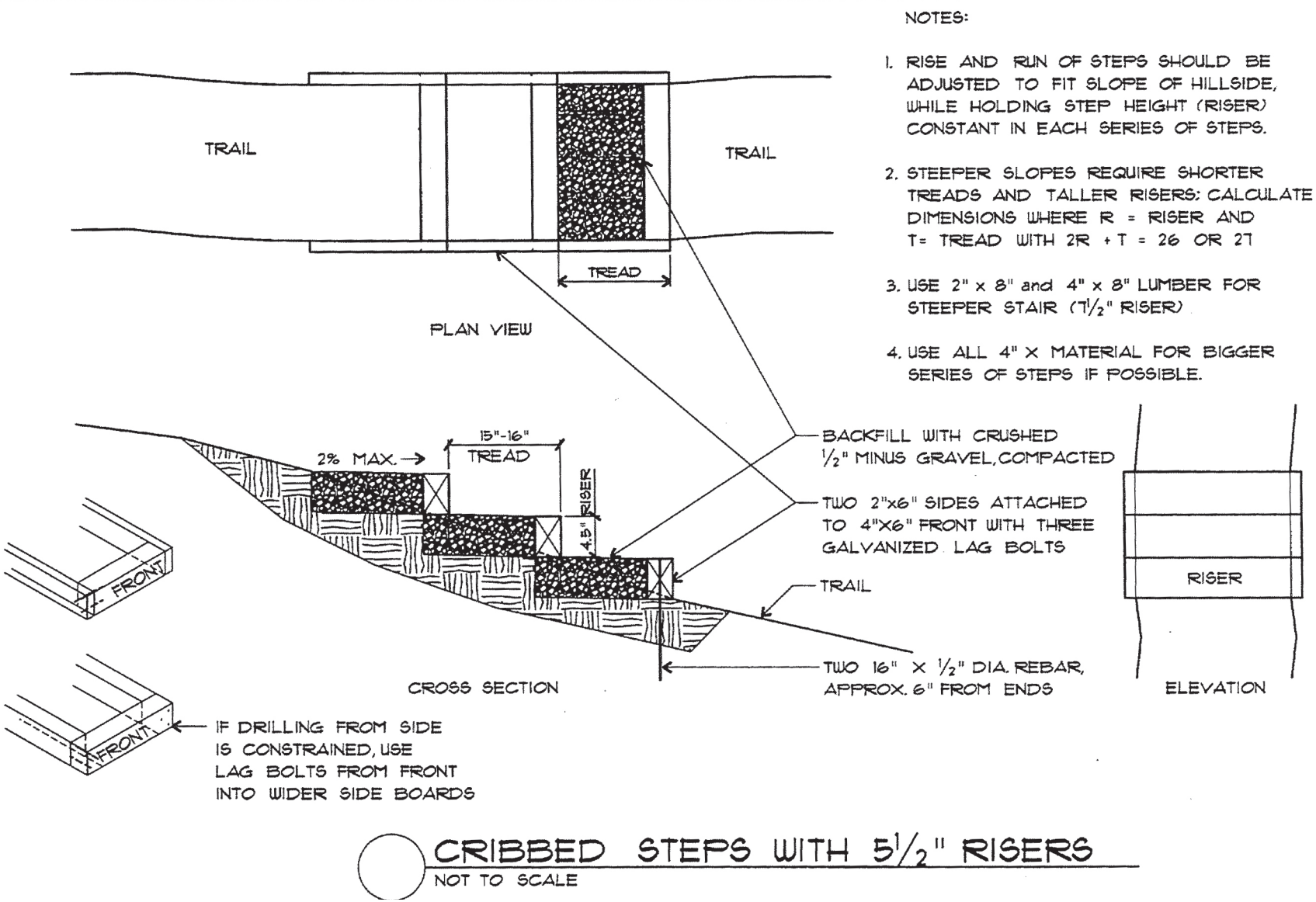

Source: Portland Parks and Recreation Trail Design Guidelines for Portland's Park System, May 2009

Appendix A City of Portland Trail Details

Figure A-2 Timber Steps (Portland Trail Detail 02, pg. 43)

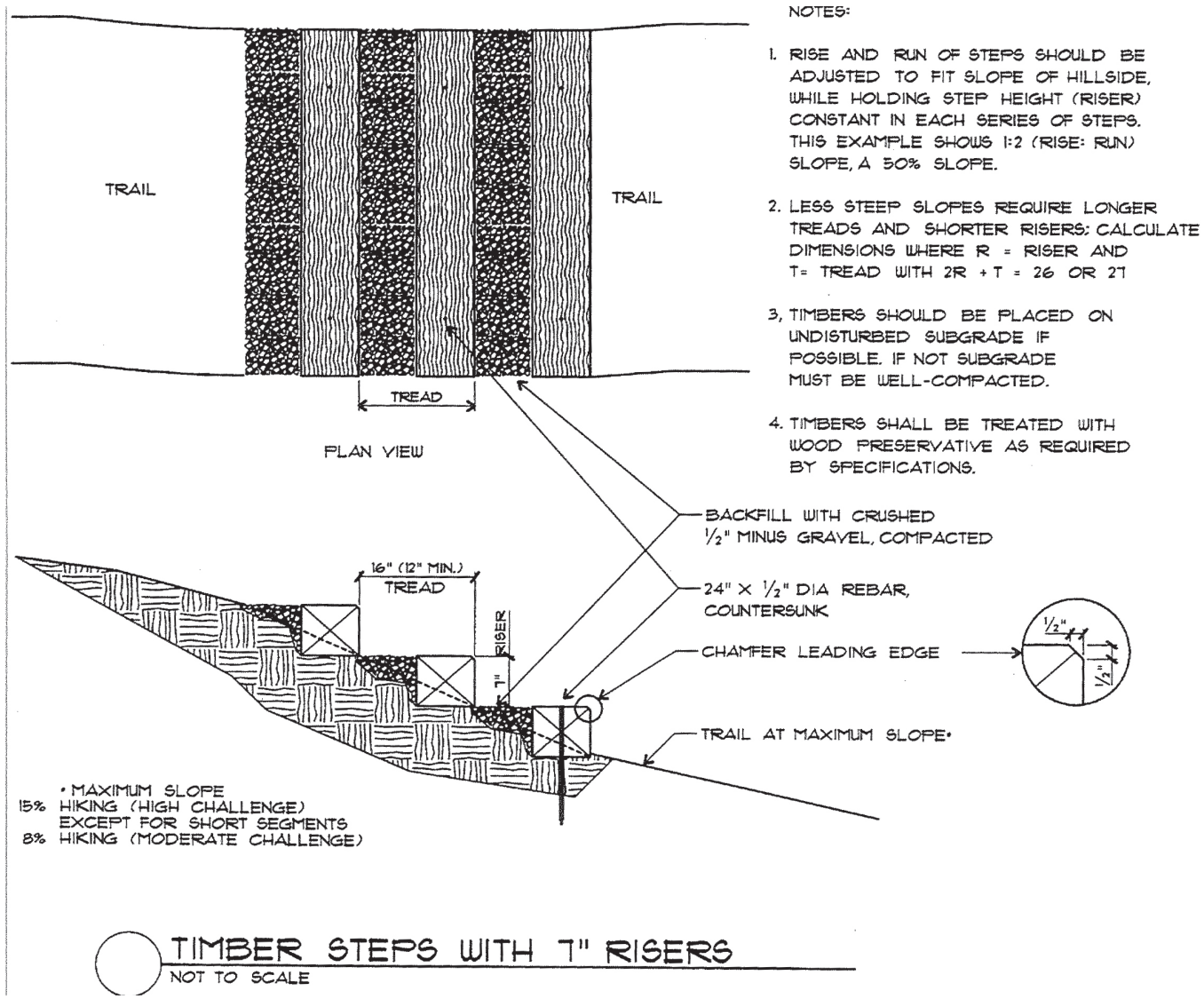

Source: Portland Parks and Recreation Trail Design Guidelines for Portland's Park System, May 2009

Appendix A City of Portland Trail Details

Figure A-3 Boardwalk (Portland Trail Detail 03, pg. 45)

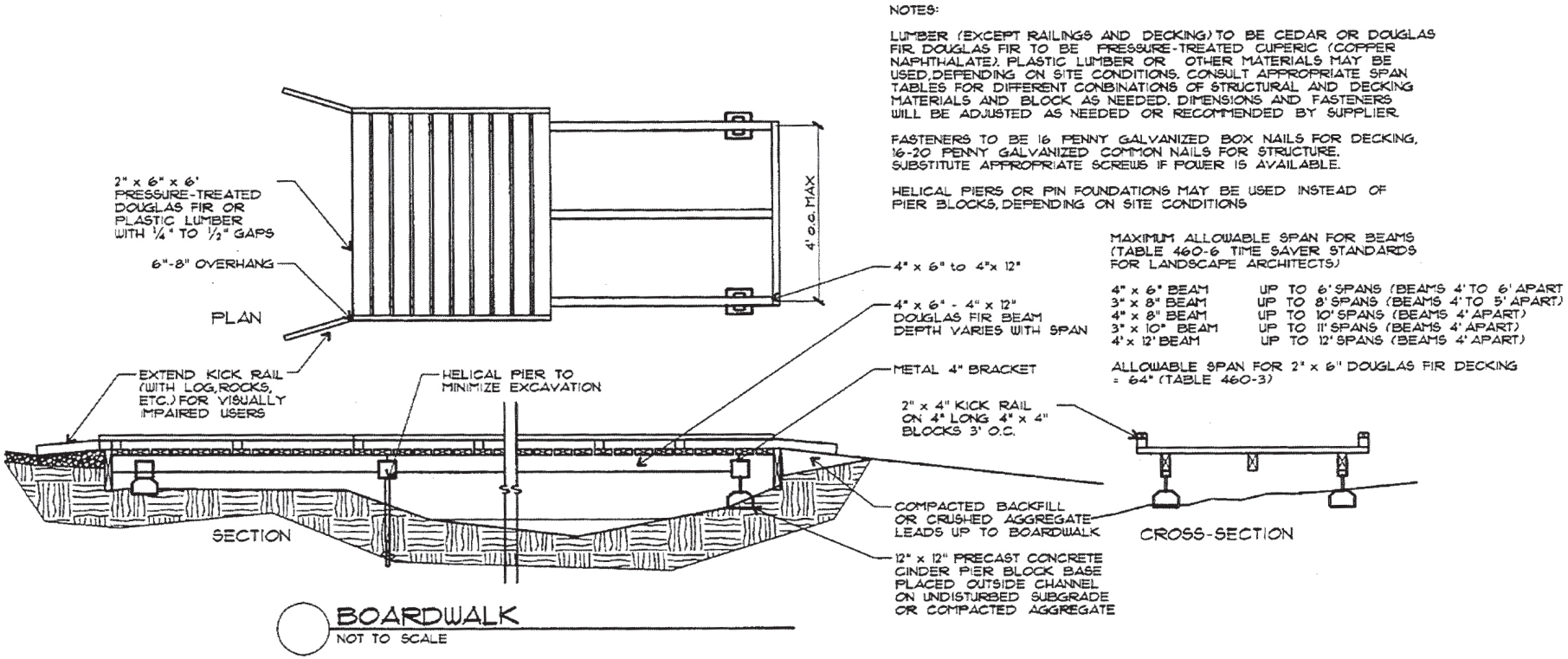

Source: Portland Parks and Recreation Trail Design Guidelines for Portland's Park System, May 2009

Appendix A City of Portland Trail Details

Figure A-4 Bridge with Raililng (Portland Trail Detail 05, pg. 49)

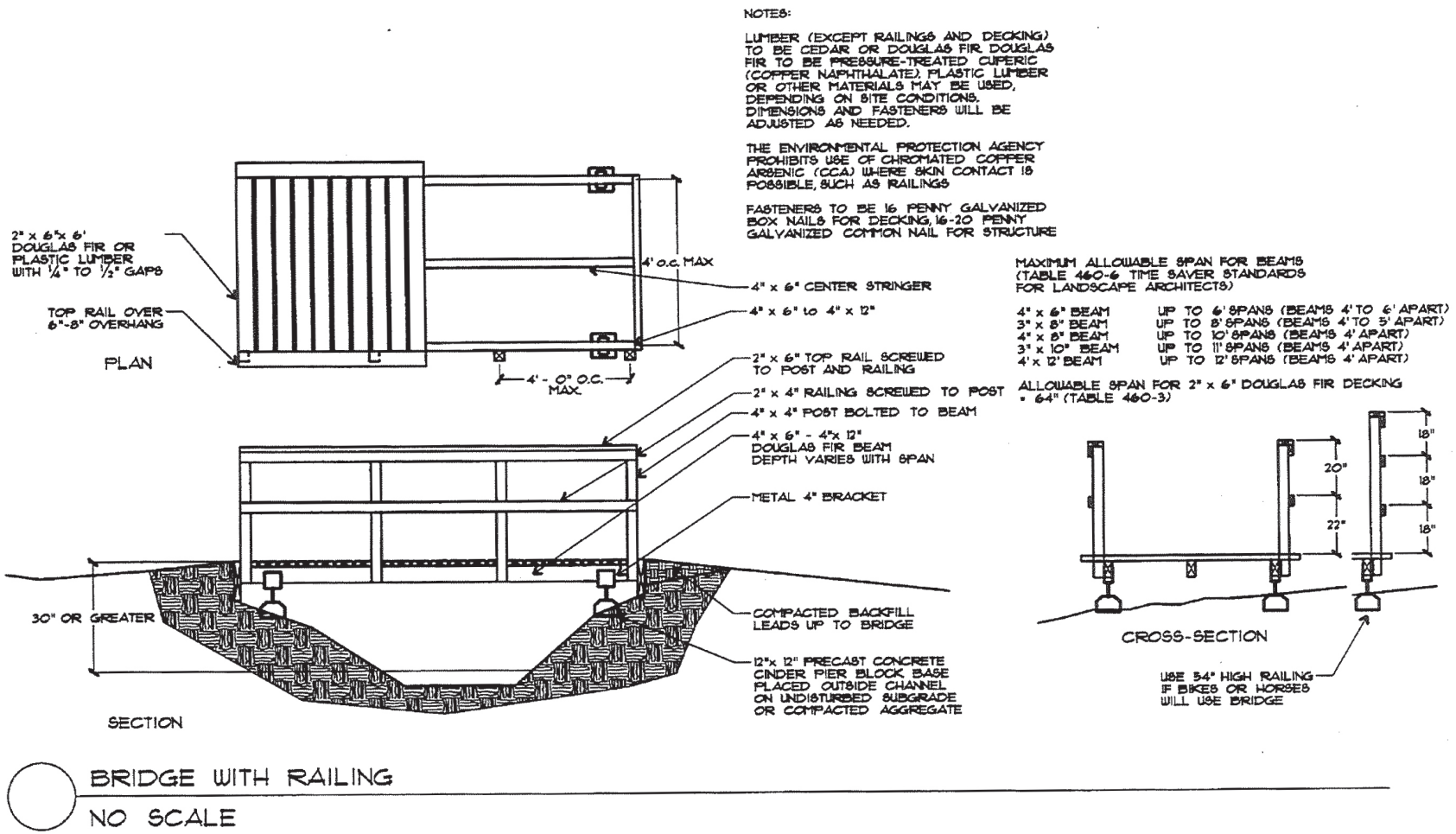

Appendix A City of Portland Trail Details

Figure A-5 Alignment Tread Crests (Portland Trail Detail 14, pg. 67)

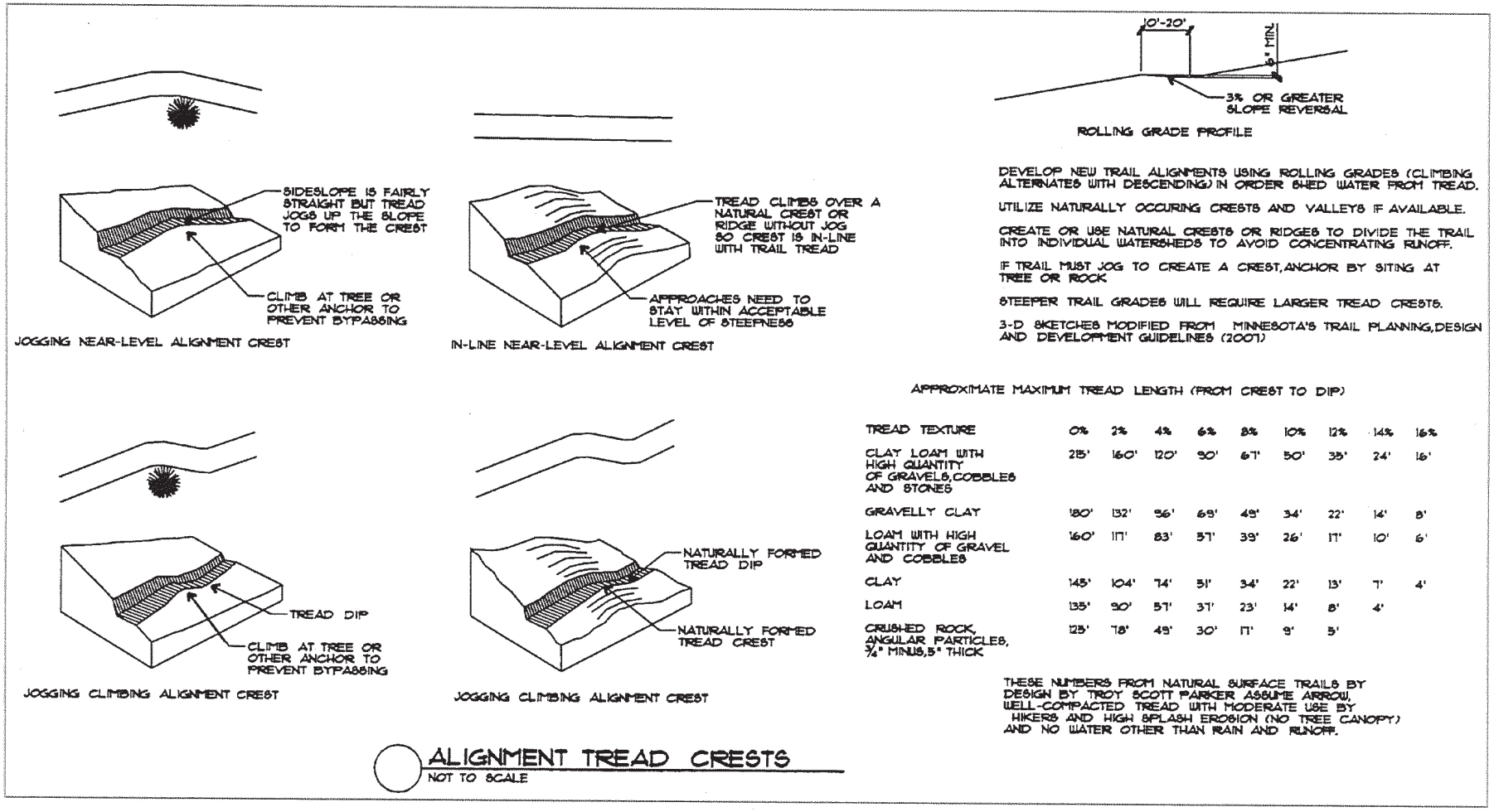

Also see Trail Detail 15-Alignment Tread Dips

Figure A-6 Alignment Tread Dips (Portland Trail Detail 15, pg. 69)

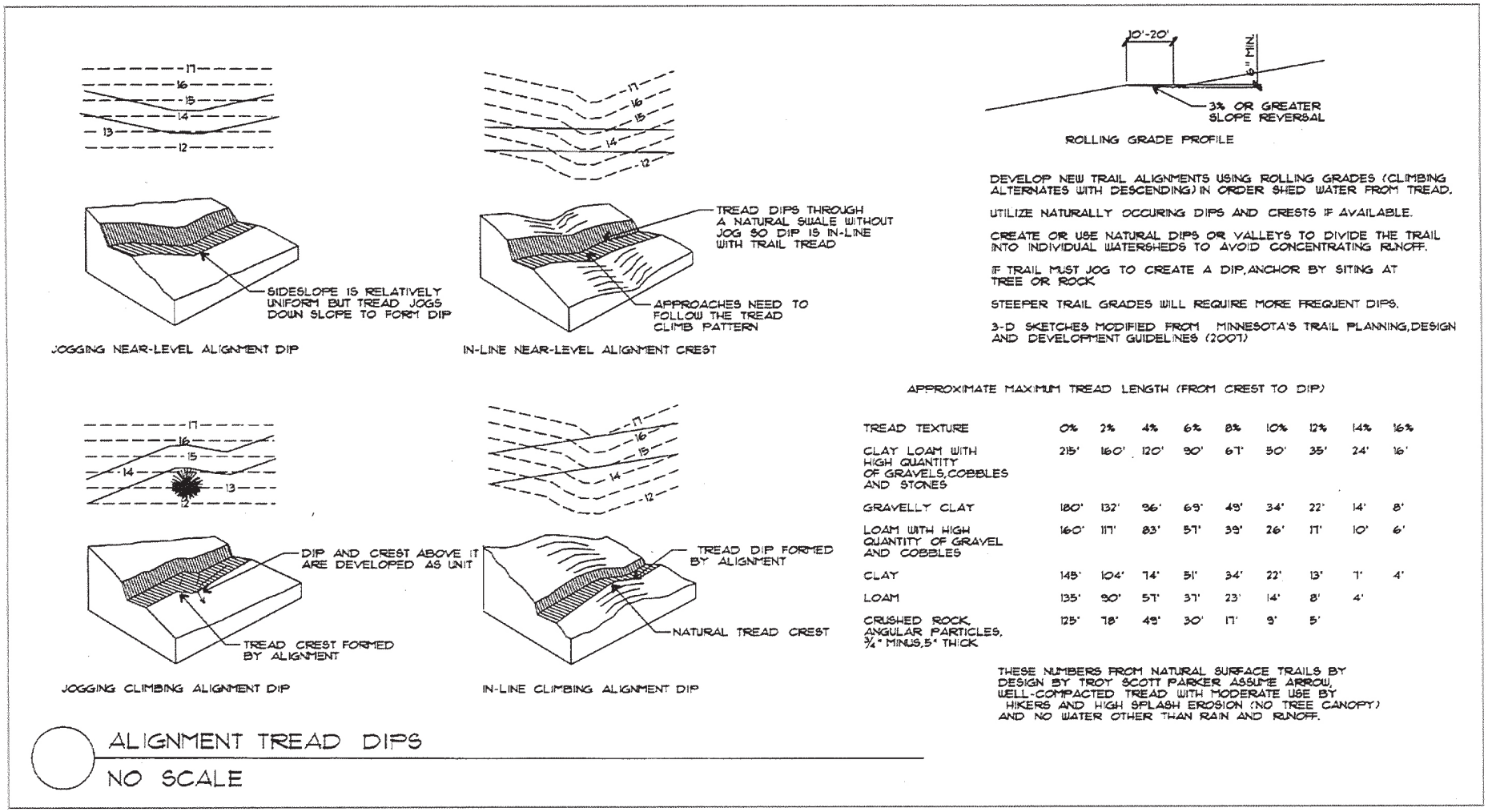

Also see Trail Detail 14-Alignment Tread Crests

Appendix A City of Portland Trail Details

Figure A-7 Cribbed Retaining Wall (Portland Trail Detail 17, pg. 73)

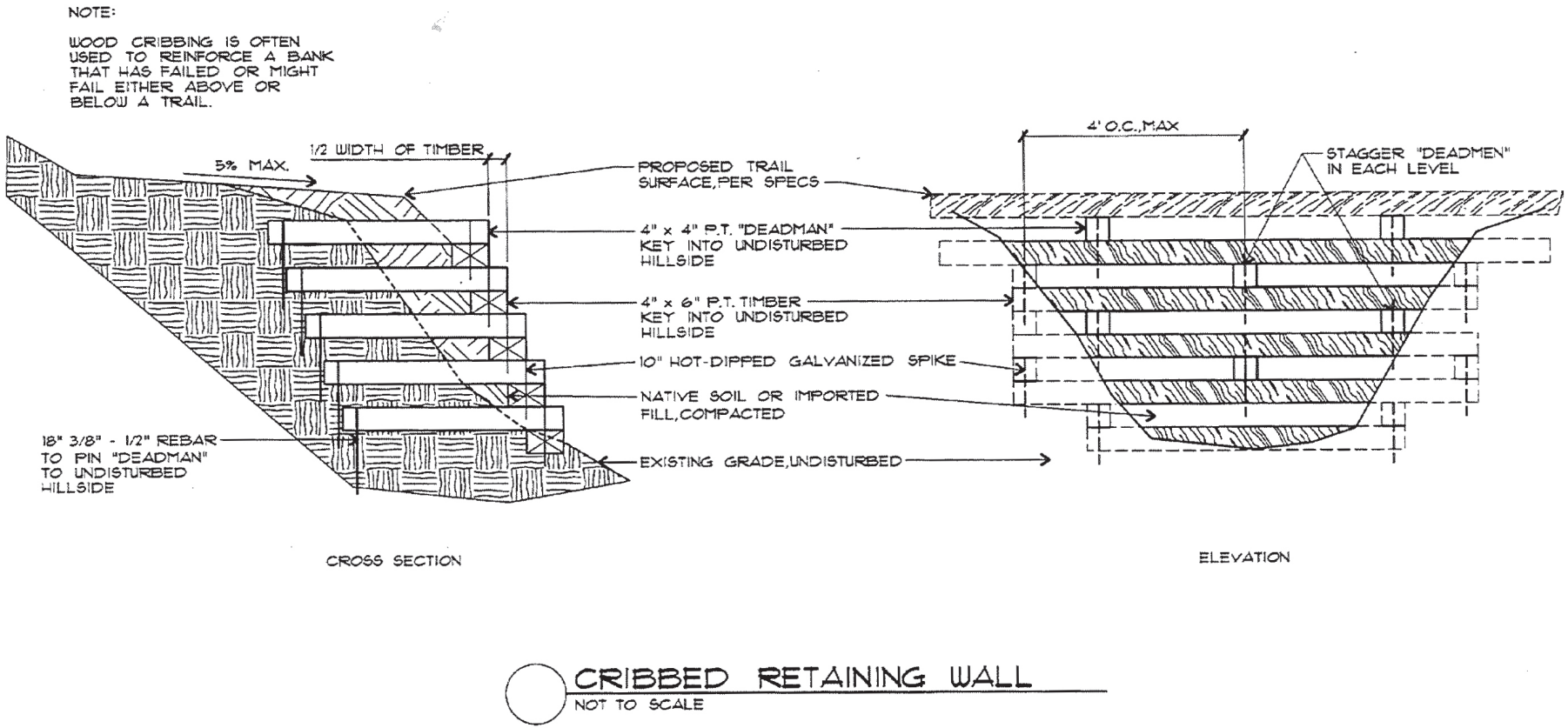

APPENDIX B

Habitat Type Plant Lists

Table B-1: Plants for prairie grassland ecologies

Forbs (wildflowers)			Pollinator		Bloom time*								
Species	Common name	Color	Host	Food	Feb.	March	April	May	June	July	Aug.	Sept.	Oct.
Achillea millefolium	Yarrow	White	•	•									
Allium acuminatum	Taper-tip onion	Pink		•									
Allium amplectens	Narrowleaf onion	White		•									
Anaphalis margaritacea	Pearly everlasting	White	•	•									
Aquilegia formosa	Western columbine	Orange		•									
Asclepias speciosa	Showy milkweed	Pink		•									
Brodiaea coronaria	Harvest brodiaea	Purple		•									
Camassia leichtlinii	Great camas	Blue		•									
Camassia quamash	Common camas	Blue		•									
Cardamine nuttallii	Nuttall's toothwort	Pink											
Clarkia amoena	Farewell to spring	Pink		•									
Collinsia grandiflora	Blue-eyed Mary	Blue		•									
Collomia grandiflora	Large-flowered collomia	Orange											
Cynoglossum grande	Pacific hounds' tongue	Blue											
Dicentra formosa	Western bleedingheart	Pink	•	•									
Dichelostema congestum [Brodiaea congesta]	Ookow	Purple											
Dodecatheon hendersonii	Broad-leaved shooting star	Pink											
Dodecatheon pulchellum	Dark-throated shooting Star	Pink		•									
Eriophyllum lanatum	Oregon sunshine	Yellow		•									
Fragaria vesca	Woodland strawberry	White		•									
Fragaria virginia	Mountain strawberry	White		•									
Geum macrophyllum	Big-leaved avens	Yellow		•									
Heuchera micrantha	Small-flowered alumroot	White											
Hydrophyllum tenuipes	Pacific waterleaf	Purple		•									
Iris tenax	Oregon iris	Purple											

Appendix B. Habitat Type Plant Lists

Table B-1: Plants for prairie grassland ecologies *(continued from previous page)*

Forbs (wildflowers)			Pollinator		Bloom time*								
Species	Common name	Color	Host	Food	Feb.	March	April	May	June	July	Aug.	Sept.	Oct.
Lilium columbianum	Tiger lily	Orange		•									
Lithophragma parviflorum	Smooth prairie star	Pink											
Lomatium (various)	Lomatium	Yellow	•	•									
Madia gracilis	Slender tarweed	Yellow											
Micranthes integrifolia	Whole-leaf saxifrage	White											
Micranthes occidentalis	Western saxifrage	White											
Micranthes oregana	Oregon saxifrage	White											
Microsteris gracilis	Slender phlox	Pink											
Mimulus guttatus	Common monkeyflower	Yellow		•									
Plagiobothrys figuratus	Fragrant popcorn flower	White		•									
Plagiobothrys scouleri	Scouler's popcorn flower	White											
Plectritis congesta	Rosy plectritis	Pink		•									
Potentilla gracilis	Five-finger cinquefoil	Yellow											
Prunella vulgaris	Self-heal	Purple		•									
Ranunculus occidentalis	Western buttercup	Yellow											
Ranunculus orthorhyncus	Straightbeak buttercup	Yellow											
Sedum oreganum	Oregon stonecrop	Yellow		•									
Sedum spathulifollium	Broad-leaf sedum	Yellow		•									
Sidalcea campestris	Meadow sidalcea	Pink		•									
Sisyrinchium idahoense	Idaho blue-eyed grass	Purple											
Solidago elongata	West coast goldenrod	Yellow		•									
Solidago lepida	Western Canada goldenrod	Yellow		•									
Synthyris reniformis	Spring queen	Purple											
Triteleia hyacinthina	Hyacinth brodiaea	White											
Viola adunca	Early blue violet	Purple		•									
Viola praemorsa		Yellow											

Appendix B. Habitat Type Plant Lists

Table B-1: Plants for prairie grassland ecologies *(continued from previous page)*

Graminoids (grass-like plants)					Bloom time								
Species	Common name	Color	Host	Food	Feb.	April	May	June	July	Aug.	Sept.		
Agrostis exarata	Spike bentgrass	Green											
Carex densa	Dense sedge	Green											
Carex leptopoda	Dewey's sedge	Green											
Carex scoparia		Green											
Carex tumulicola	Foothill sedge	Green											
Festuca roemeri	Roemer's fescue	Green											
Koeleria macrantha	Junegrass	Green											
Luzula comosa	Wood rush	Green											
Shrubs					**Bloom time**								
Species	Common name	Color	Host	Food	Feb.	March	April	May	June	July	Aug.	Sept.	
Berberis aquifolium	Tall Oregon grape	Yellow	•	•									
Gaultheria shallon	Salal	White	•	•									
Holodiscus discolor	Oceanspray	White											
Philadelphus lewisii	Mock-orange	White		•									
Ribes sanguineum	Red-flowering currant	Pink		•									
Rosa gymnocarpa	Baldhip rose	Pink	•	•									
Rubus parviflorus	Thimbleberry	White		•									
Rubus spectabilis	Salmonberry	Pink		•									
Salix spp.	Willow	Green											
Symphoricarpos albus	Snowberry	White	•	•									

Appendix B. Habitat Type Plant Lists

Table B-2: Plants for forest/woodland settings

Forest species	Common name	Bloom Color	Pollinator Value	Mast Value (berries, cones)	Winter Cover	Suitable for Power Line Corridors
Forbs (wildflowers)						
Adenocaulon bicolor	Pathfinder	Yellow	Host			•
Asarum caudatum	Wild ginger	Maroon				•
Dicentra formosa	Western bleedingheart	Pink	Host			•
Hydrophyllum tenuipes	Pacific waterleaf	Purple	Food			•
Maianthemum spp.	False Solomon's seal	White				•
Vancouveria he•andra	Inside-out flower	White				•
Viola glabella	Yellow wood violet	Yellow				•
Ferns and others						
Polystichum munitum	Sword fern	-	Host		•	•
Shrubs						
Acer circinatum	Vine maple	Green	Host			10 – 25'
Gaultheria shallon	Salal	White	Host	•		1 – 3'+
Mahonia nervosa	Cascade Oregon grape	Yellow		•	•	2'
Oemleria cerasiformis	Indianplum	White	Host	•		4 – 10'
Rubus spectabilis	Salmonberry	Pink	Host	•		3 – 7'
Sambucus racemosa	Red elderberry	White	Host	•		6 – 15'
Symphoricarpos albus	Snowberry	White	Host	•		2 – 6'
Vaccinium parvifolium	Red huckleberry	White		•		3 – 8'+
Trees						
Acer macrophyllum	Bigleaf maple					75 – 100' ht.
Cornus nuttallii	Western dogwood	White	Host	•		10 – 50'
Malus fusca	Wild crabapple	White	Host	•		20 – 30'
Prunus emarginata	Bitter cherry	White	Host	•		3 – 12'
Prunus virginiana var. melanocarpa	Chokecherry	White	Host	•		2 – 12'
Pseudotsuga menziesii	Douglas fir	-		•	•	200'+

Appendix B. Habitat Type Plant Lists

Table B-2: Plants for forest/woodland settings *(continued from previous page)*

Forest species	Common name	Bloom Color	Pollinator Value	Mast Value (berries, cones)	Winter Cover	Suitable for Power Line Corridors
Trees						
Thuja plicata	Western red cedar	-		•	•	200'+
Tsuga heterophylla	Western hemlock	-		•	•	125 – 200'
Graminoids (grass-like plants)						
Carex hendersonii	Timber sedge	-		•		•
Carex leptopoda (deweyana)	Slender-foot (Dewey) sedge	-		•		•

Table B-3: Plants for wetlands, streams and riparian settings

Wetland species	Common name	Bloom Color	Pollinator Value	Mast Value (berries, cones)	Winter Cover	Suitable for Power Line Corridors
Forbs (wildflowers)						
Bidens cernua	Nodding beggarticks	Yellow				•
Bidens frondosa	Leafy beggarticks	Yellow				•
Shrubs						
Cornus sericea	Red-twig dogwood	White		•		•
Physocarpus capitatus	Pacific ninebark	White				•
Rosa pisocarpa	Clustered wild rose	Pink		•		•
Salix scouleriana	Scouler's willow	Green	Food			
Salix sitchensis	Sitka willow	Green	Food			
Spiraea douglasii	Hardhack	Pink	Food			•
Trees						
Salix lasiandra var. lasiandra	Pacific willow	Green	Food			
Graminoids (grass-like plants)						
Agrostis exarata	Spike bentgrass	-		•		•

Appendix B. Habitat Type Plant Lists by Bloom Time

Table B-4

Forbs (wildflowers)			Pollinator			Bloom time*							
Species	Common name	Color	Host	Food	Feb.	March	April	May	June	July	Aug.	Sept.	Oct.
Aquilegia formosa	Red columbine	Orange		•									
Collomia grandiflora	Large flowered collomia	Orange											
Lilium columbianum	Columbia lily	Orange		•									
Cardamine nuttallii	Spring beauty	Pink											
Dodecatheon hendersonii	Broadleaf shooting star	Pink											
Lithophragma parviflorum	Small flowered fringecup	Pink											
Dicentra formosa	Bleeding heart	Pink	•	•									
Plectritis congesta	Rosy plectritis	Pink		•									
Dodecatheon pulchellum	Shooting star	Pink		•									
Microsteris gracilis	Slender phlox	Pink											
Allium acuminatum	Tapertip onion	Pink		•									
Asclepias speciosa	Showy milkweed	Pink		•									
Clarkia amoena	Farewell to spring	Pink		•									
Sidalcea campestris	Meadow checkermallow	Pink		•									
Synthyris reniformis	Snow queen	Purple											
Cynoglossum grande	Pacific hounds' tongue	Blue											
Viola adunca	Hookedspur violet	Purple		•									
Iris tenax	Oregon iris	Purple											
Collinsia grandiflora	Blue-eyed Mary	Blue		•									
Camassia leichtlinii	Large camas	Blue		•									
Camassia quamash	Small camas	Blue		•									
Dichelostema congestum	Ookow	Purple											
Hydrophyllum tenuipes	Pacific waterleaf	Purple		•									
Sisyrinchium idahoense	Blue-eyed grass	Purple											
Prunella vulgaris	Self-heal	Purple		•									
Brodiaea coronaria	Crown brodiaea	Purple		•									

Appendix B. Habitat Type Plant Lists by Bloom Time

Table B-4

Forbs (wildflowers)			Pollinator		Bloom time*								
Species	Common name	Color	Host	Food	Feb.	March	April	May	June	July	Aug.	Sept.	Oct.
Micranthes occidentalis	Western mountain saxifrage	White											
Micranthes integrifolia	Wholeleaf saxifrage	White											
Fragaria vesca	Woods strawberry	White		•									
Micranthes oregana	Oregon saxifrage	White											
Heuchera micrantha	Alumroot	White											
Plagiobothrys figuratus	Fragrant popcornflower	White		•									
Triteleia hyacinthina	Hyacinth brodiaea	White											
Fragaria virginia	Prairie strawberry	White		•									
Plagiobothrys scouleri	Scouler's popcornflower	White											
Achillea millefolium	Yarrow	White	•	•									
Allium amplectens	Slim leaf onion	White		•									
Anaphalis margaritacea	Pearly everlasting	White	•	•									
Ranunculus orthorhyncus	Straightbeak buttercup	Yellow											
Lomatium (various)	Biscuitroot	Yellow	•	•									
Mimulus guttatus	Seep monkeyflower	Yellow		•									
Ranunculus occidentalis	Western buttercup	Yellow											
Viola praemorsa	Canary violet	Yellow											
Sedum spathulifollium	Stonecrop	Yellow		•									
Potentilla gracilis	Graceful cinquefoil	Yellow											
Geum macrophyllum	Avens	Yellow		•									
Madia gracilis	Slender tarweed	Yellow											
Eriophyllum lanatum	Oregon sunshine	Yellow		•									
Solidago elongata	West coast goldenrod	Yellow		•									
Solidago lepida	Western Canada goldenrod	Yellow		•									

Appendix B. Habitat Type Plant Lists by Bloom Time

Table B-4

Graminoids (grass-like plants)			Pollinator		Bloom time*								
Species	Common name	Color	Host	Food	Feb.	March	April	May	June	July	Aug.	Sept.	Oct.
Agrostis exarata	Spike bentgrass	Green											
Carex densa	Dense sedge	Green											
Carex leptopoda	Dewey's sedge	Green											
Carex scoparia		Green											
Carex tumulicola	Foothill sedge	Green											
Festuca roemeri	Roemer's fescue	Green											
Koeleria macrantha	Junegrass	Green											
Luzula comosa	Wood rush	Green											
Shrubs			**Pollinator**		**Bloom time***								
Species	Common name	Color	Host	Food	Feb.	March	April	May	June	July	Aug.	Sept.	Oct.
Ribes sanguineum	Red-flowering currant	Pink		•									
Rosa gymnocarpa	Baldhip rose	Pink	•	•									
Symphoricarpos albus	Snowberry	Pink	•	•									
Rubus spectabilis	Salmonberry	Pink	•	•									
Rubus parviflorus	Thimbleberry	White		•									
Gaultheria shallon	Salal	White	•	•									
Philadelphus lewisii	Mock orange	White		•									
Holodiscus discolor	Oceanspray	White		•									
Berberis aquifolium	Tall Oregon grape	Yellow	•	•									
Salix spp.	Willow	Green	•	•									